GERPAAS®

Support systems
Supportage
Tragsystemen
Поддержка систем
Destek sistemleri

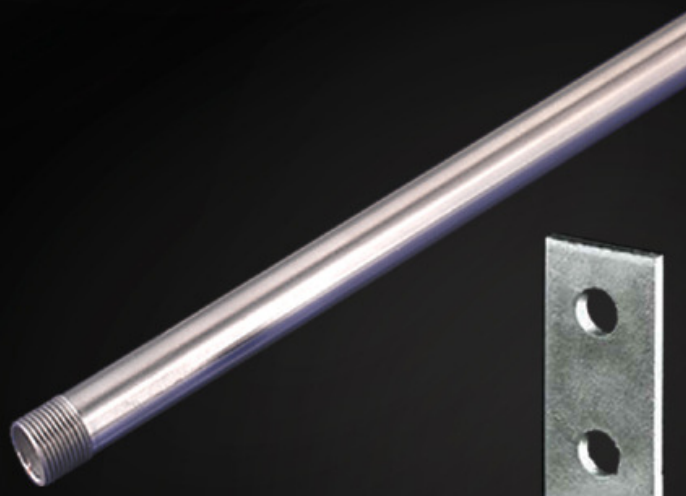

About GERPAAS

GERPAAS is a leading manufacturer of cable management systems, earthing & lightning products, marine systems, stone fixings and steel lintels headquartered in Istanbul Turkey.

Founded in the year of 1991, GERPAAS, has become an important player in the construction market with the extensive product lines carried ranging from cable tray and cable ladder systems for onshore / offshore applications to earthing systems, from stone façade fixings to steel lintels, and from HVAC fixings to pipe supports.

Our enriched know-how in production enable us work with customers from different industries including electrical contractors, ship builders, building contractors, HVAC contractors, traders, stockists, procurement offices and more.

- Cable management systems
- Marine type cable supports
- Strut channels, support systems
- Earthing systems
- Lightning protection systems
- Stone fixings
- Steel lintels
- Other building products

Visit us online at www.gerpaas.com

Material options: Stainless steel AISI 304 (L) (A2) / AISI 316 (L) (A4), ST-37-42 Mild Steel, Corten A, Pregalvanized steel, Aluminum
Finish options : Hot Dip Galvanized to EN 1461, Electrogalvanized to TS 149, Electrostatic Paint Coated, Prime coated

GE-UCD
C channel, perforated, single
C profil, delikli, tekli
Профиль

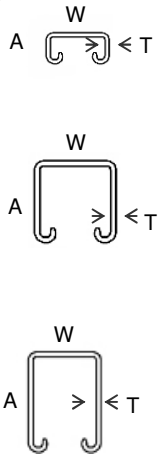

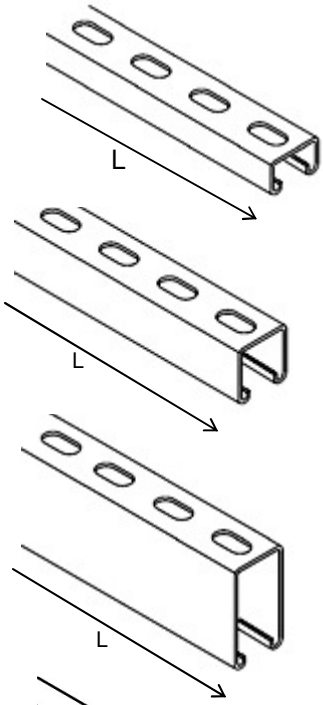

Part No	T	W	A	L	Kg/m	I_y cm^4	I_z cm^4
GE-UCD-1	2,0	41	21	3000	1.40	1,1	4,7
GE-UCD-2	2,5	41	21	3000	1.75	1,3	5,6
GE-UCD-3	1,5	41	41	3000	1.60	4,9	6,1
GE-UCD-4	2,0	41	41	3000	2.05	6,2	7,8
GE-UCD-5	2,5	41	41	3000	2.70	7,3	9,3
GE-UCD-6	2,5	41	83	6000	4,30	37,5	16,5

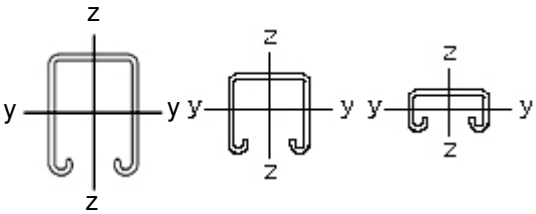

HDG PG SS4 SS6 ESB APB

GE-CPC
Cover for channel, PVC
Profil kapağı, plastik
Обложка для канала, ПВХ

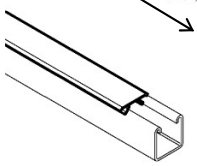

GE-CDOD
C channel, perforated, back to back
C profil, delikli, çiftli
Профиль

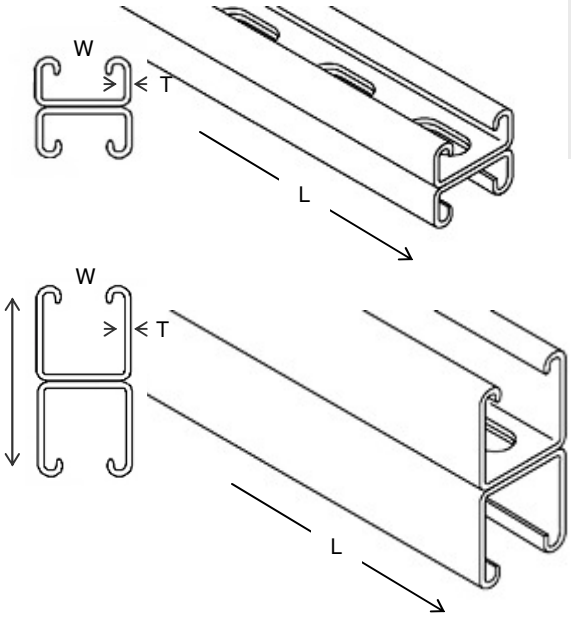

Part No	T	W	A	L	Kg/m	I_y cm^4	I_z cm^4
GE-CDOD-01	2,0	41	43	3000	2,80	9,4	5,4
GE-CDOD-02	2,0	41	83	3000	4,10	31,6	15,5
GE-CDOD-03	2,5	41	43	3000	3,50	11,1	6,2
GE-CDOD-04	2,5	41	83	3000	5,40	37,5	18,6

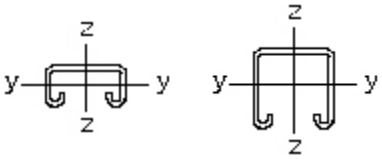

HDG PG SS4 SS6 ESB APB

Material options: Stainless steel AISI 304 (L) (A2) / AISI 316 (L) (A4), ST-37-42 Mild Steel, Corten A, Pregalvanized steel, Aluminum
Finish options : Hot Dip Galvanized to EN 1461, Electrogalvanized to TS 149, Electrostatic Paint Coated, Prime coated

GE-UC
C channel, non perforated
C profil, deliksiz
Профиль

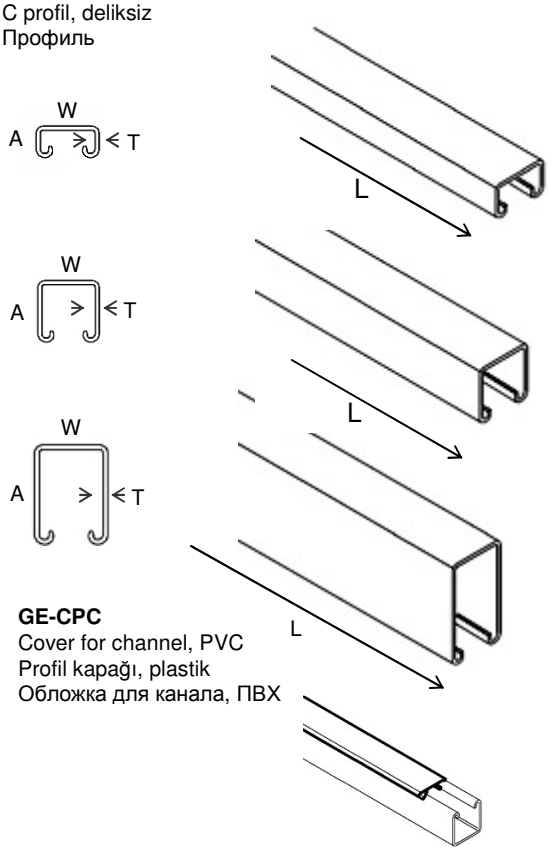

Part No	T	W	A	L	Kg/m	I_y cm^4	I_z cm^4
GE-UC-1	2,0	41	21	3000	1.50	1,1	4,7
GE-UC-2	2,5	41	21	3000	1.85	1,3	5,6
GE-UC-3	1,5	41	41	3000	1.70	4,9	6,1
GE-UC-4	2,0	41	41	3000	2.15	6,2	7,8
GE-UC-5	2,5	41	41	3000	2.80	7,3	9,3
GE-UC-6	2,5	41	83	6000	4,40	37,5	16,5

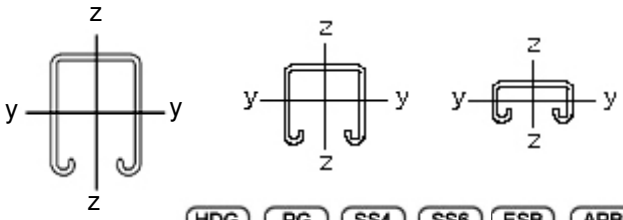

HDG PG SS4 SS6 ESB APB

GE-CPC
Cover for channel, PVC
Profil kapağı, plastik
Обложка для канала, ПВХ

GE-CDO
C channel, non-perforated, back to back
C profil, deliksiz, çiftli
Профиль

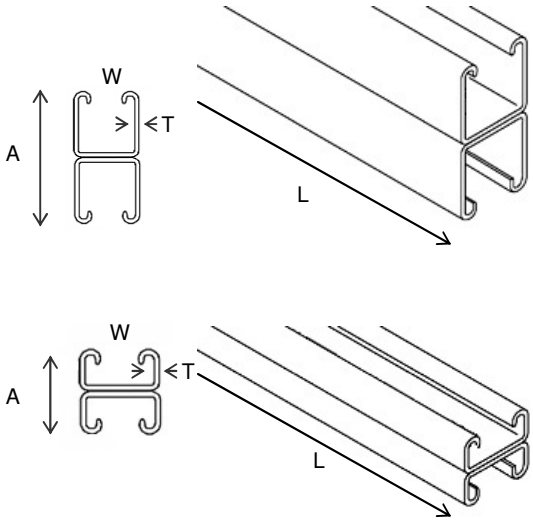

Part No	T	W	A	L	Kg/m	I_y cm^4	I_z cm^4
GE-CDO-1	2.0	41	43	3000	3.00	9,4	5,4
GE-CDO-2	2.0	41	83	3000	4.30	31,6	15,5
GE-CDO-3	2.5	41	43	3000	3.75	11,1	6,2
GE-CDO-4	2.5	41	83	3000	5.60	37,5	18,6

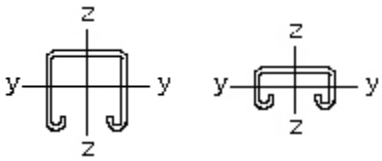

HDG PG SS4 SS6 ESB APB

Material options: Stainless steel AISI 304 (L) (A2) / AISI 316 (L) (A4), ST-37-42 Mild Steel, Corten A, Pregalvanized steel, Aluminum
Finish options : Hot Dip Galvanized to EN 1461, Electrogalvanized to TS 149, Electrostatic Paint Coated, Prime coated

GE-UCHD
C channel, perforated, single
C profil, delikli, tekli
Профиль

Part No	T	W	A	L	Kg/m	I_y cm^4	I_z cm^4
GE-UCHD-1	1,5	41	21	3000	1,04	0,8	3,4
GE-UCHD-2	1,5	41	41	3000	1,52	4,4	5,8
GE-UCHD-3	2,0	41	41	3000	2,05	5,6	7,4
GE-UCHD-4	1.2	27	18	2000	0,65	0,4	0,9
GE-UCHD-5	2,0	38	40	2000	2,00	5,0	6,1
GE-UCHD-6	3,0	40	60	2000	3,85	13,5	20,0

HDG PG SS4 SS6 ESB APB

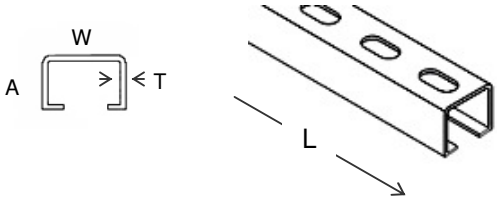

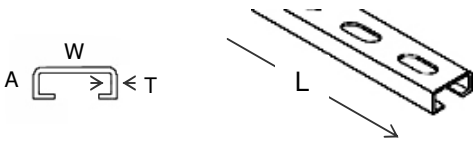

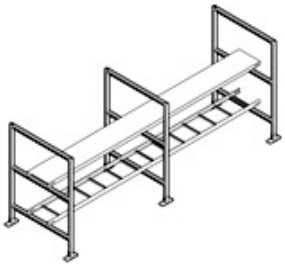

GE-UCHOD
C channel, perforated, back to back
C profil, delikli, çiftli
Профиль

Part No	T	W	A	L	Kg/m	I_y cm^4	I_z cm^4
GE-UCHOD-1	1,5	41	43	3000	2,08	3,3	6,8
GE-UCHOD-2	1,5	41	83	3000	3,04	19,7	11,5
GE-UCHOD-3	2,0	41	83	3000	4,10	25,7	14,7

HDG PG SS4 SS6 ESB APB

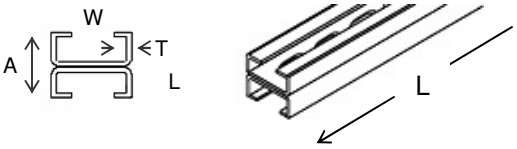

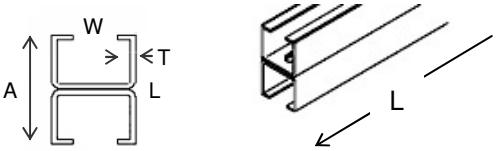

Material options: Stainless steel AISI 304 (L) (A2) / AISI 316 (L) (A4), ST-37-42 Mild Steel, Corten A, Pregalvanized steel, Aluminum
Finish options : Hot Dip Galvanized to EN 1461, Electrogalvanized to TS 149, Electrostatic Paint Coated, Prime coated

GE-UCH
C channel, non perforated
C profil, deliksiz
Профиль

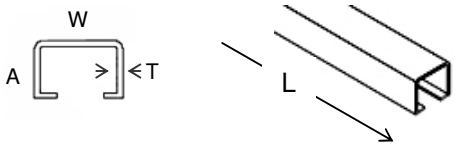

Part No	T	W	A	L	Kg/m	I_y cm^4	I_z cm^4
GE-UCH-1	1,5	41	21	3000	1,12	0,8	3,4
GE-UCH-2	1,5	41	41	3000	1,60	4,4	5,8
GE-UCH-3	2,0	41	41	3000	2,15	5,6	7,4

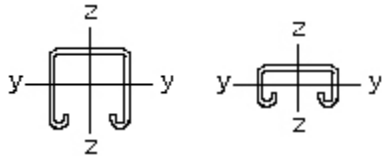

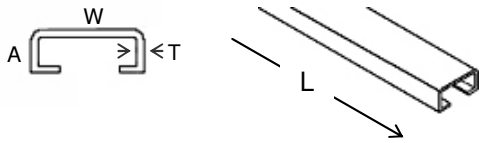

HDG PG SS4 SS6 ESB APB

GE-UCHO
C channel, non-perforated, back to back
C profil, deliksiz, çiftli
Профиль

Part No	T	W	A	L	Kg/m	I_y cm^4	I_z cm^4
GE-UCHO-1	1,5	41	43	3000	2,24	3,3	6,8
GE-UCHO-2	1,5	41	83	3000	3,20	19,7	11,5
GE-UCHO-3	2,0	41	83	3000	4,30	25,7	14,7

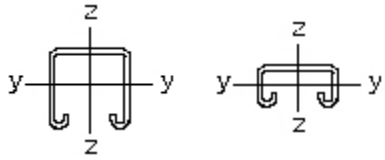

HDG PG SS4 SS6 ESB APB

GERPAAS®

EN Support systems
FR Supportage
D Tragsystemen
RU Поддержка систем
TR Destek sistemleri

Material options: Stainless steel AISI 304 (L) (A2) / AISI 316 (L) (A4), ST-37-42 Mild Steel, Corten A, Pregalvanized steel, Aluminum
Finish options : Hot Dip Galvanized to EN 1461, Electrogalvanized to TS 149, Electrostatic Paint Coated, Prime coated

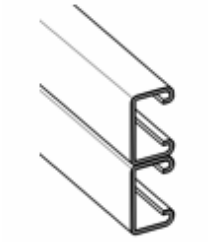
GE-UCAF-1

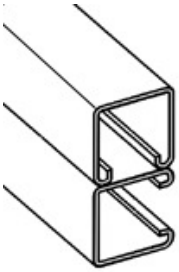
GE-UCAF-2

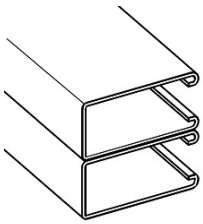
GE-UCAF-3

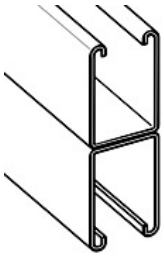
GE-UCAF-4

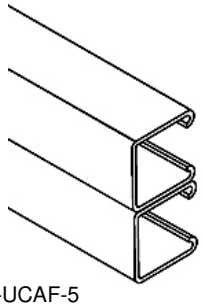
GE-UCAF-5

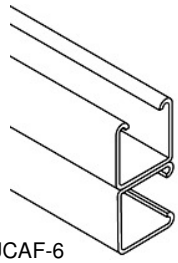
GE-UCAF-6

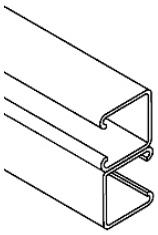
GE-UCAF-7

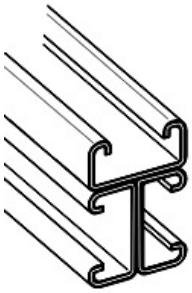
GE-UCAF-8

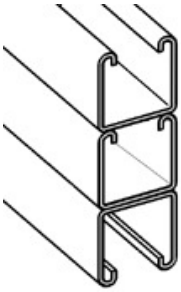
GE-UCAF-9

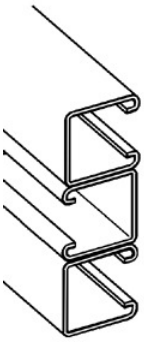
GE-UCAF-10

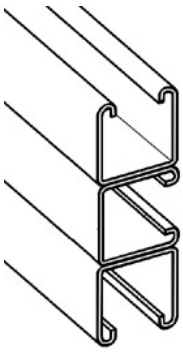
GE-UCAF-11

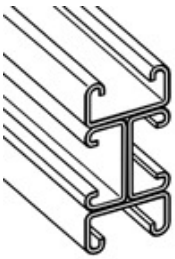
GE-UCAF-12

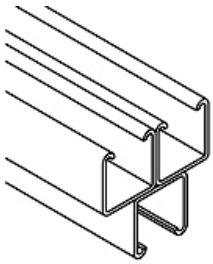
GE-UCAF-13

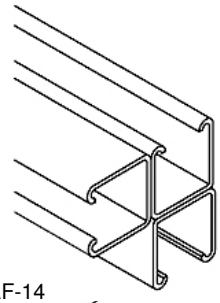
GE-UCAF-14

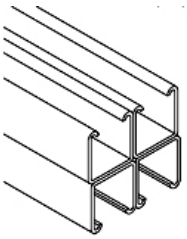
GE-UCAF-15

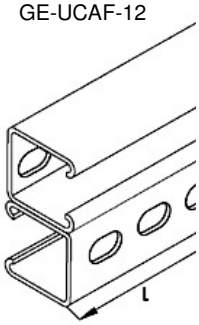

GE-UCAF-16

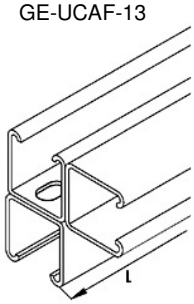

GE-UCAF-17

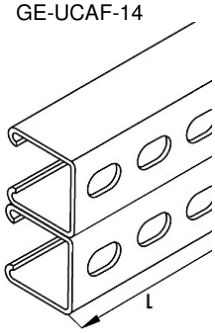

GE-UCAF-18

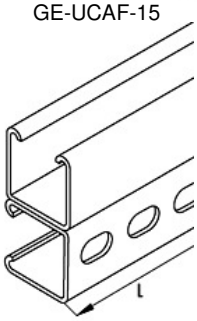

GE-UCAF-19

Material options: Stainless steel AISI 304 (L) (A2) / AISI 316 (L) (A4), ST-37-42 Mild Steel, Corten A, Pregalvanized steel, Aluminum
Finish options : Hot Dip Galvanized to EN 1461, Electrogalvanized to TS 149, Electrostatic Paint Coated, Prime coated

GE- KDC
C channel single bracket
C profil tekli konsol
Консоль

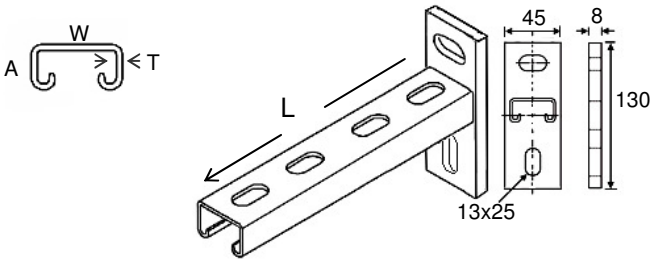

Part No	T	W	A	L	kg
GE-KDC-1	1,5	41	21	100	0.49
GE-KDC-2	1,5	41	21	150	0,54
GE-KDC-3	1,5	41	21	200	0,59
GE-KDC-4	1,5	41	21	225	0,62
GE-KDC-5	1,5	41	21	300	0,70
GE-KDC-6	1,5	41	21	400	0,80
GE-KDC-7	1,5	41	21	450	0,85
GE-KDC-8	1,5	41	21	500	0,90
GE-KDC-9	1,5	41	21	600	1,00
GE-KDC-10	2,0	41	21	100	0.52
GE-KDC-11	2,0	41	21	150	0,59
GE-KDC-12	2,0	41	21	200	0,66
GE-KDC-13	2,0	41	21	225	0,70
GE-KDC-14	2,0	41	21	300	0,80
GE-KDC-15	2,0	41	21	400	0,94
GE-KDC-16	2,0	41	21	450	1,06
GE-KDC-17	2,0	41	21	500	1,10
GE-KDC-18	2,0	41	21	600	1,22

GE-CPS
End cap for channel, PVC
Profil sonlandırma elemanı, plastik
Колпачок на конец, пластик

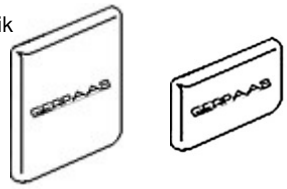

Part No	T	W	A	L	kg
GE-KDC-19	2,0	41	41	100	0,59
GE-KDC-20	2,0	41	41	150	0,70
GE-KDC-21	2,0	41	41	200	0,80
GE-KDC-22	2,0	41	41	225	0,86
GE-KDC-23	2,0	41	41	300	1,02
GE-KDC-24	2,0	41	41	400	1,25
GE-KDC-25	2,0	41	41	450	1,35
GE-KDC-26	2,0	41	41	500	1,45
GE-KDC-27	2,0	41	41	600	1,67
GE-KDC-28	2,0	41	41	750	1,99
GE-KDC-29	2,0	41	41	900	2,30
GE-KDC-30	2,5	41	41	100	0,65
GE-KDC-31	2,5	41	41	150	0,79
GE-KDC-32	2,5	41	41	200	0,93
GE-KDC-33	2,5	41	41	225	0,99
GE-KDC-34	2,5	41	41	300	1,20
GE-KDC-35	2,5	41	41	400	1,48
GE-KDC-36	2,5	41	41	450	1,60
GE-KDC-37	2,5	41	41	500	1,75
GE-KDC-38	2,5	41	41	600	2,00
GE-KDC-39	2,5	41	41	750	2,44
GE-KDC-40	2,5	41	41	900	2,85
GE-KDC-41	2,5	41	41	1000	3,15
GE-KDC-42	2,5	41	41	1200	3,68
GE-KDC-43	2,5	41	41	1500	4,50

GE- KDC
C channel single bracket
C profil tekli konsol
Консоль

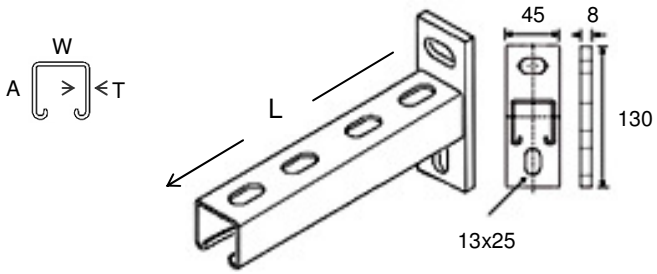

GE- KDCY
C channel single bracket, side welded
C profil tekli konsol, yan kaynak
Консоль

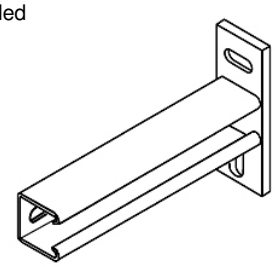

HDG EG SS4 SS6 ESB APB

Material options: Stainless steel AISI 304 (L) (A2) / AISI 316 (L) (A4), ST-37-42 Mild Steel, Corten A, Pregalvanized steel, Aluminum
Finish options : Hot Dip Galvanized to EN 1461, Electrogalvanized to TS 149, Electrostatic Paint Coated, Prime coated

GE- KDCD
C channel bracket, back to back
C profil çiftli konsol
Консоль

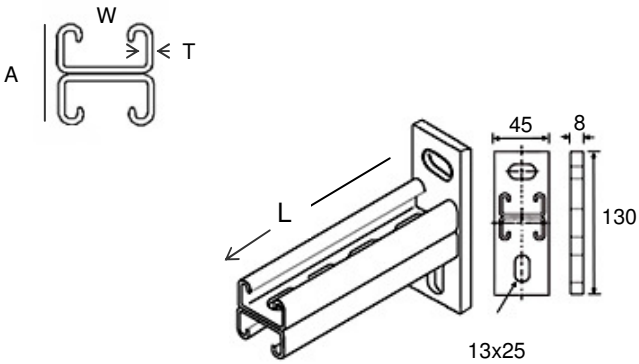

Part No	T	W	A	L	kg
GE-KDCD-1	1,5	41	43	100	0,59
GE-KDCD-2	1,5	41	43	200	0,80
GE-KDCD-3	1,5	41	43	300	1,00
GE-KDCD-4	1,5	41	43	400	1,22
GE-KDCD-5	1,5	41	43	500	1,43
GE-KDCD-6	2,0	41	43	600	2,30
GE-KDCD-7	2,0	41	43	750	2,78
GE-KDCD-8	2,0	41	43	900	3,25
GE-KDCD-9	2,0	41	43	100	0,66
GE-KDCD-10	2,0	41	43	150	0,90
GE-KDCD-11	2,0	41	43	200	1,00
GE-KDCD-12	2,0	41	43	225	1,10
GE-KDCD-13	2,0	41	43	300	1,33
GE-KDCD-14	2,0	41	43	400	1,66
GE-KDCD-15	2,0	41	43	450	1,80
GE-KDCD-16	2,0	41	43	500	1,98
GE-KDCD-17	2,5	41	43	600	2,78
GE-KDCD-18	2,5	41	43	750	3,38
GE-KDCD-19	2,5	41	43	900	3,98

GE- KDCD
C channel bracket, back to back
C profil çiftli konsol
Консоль

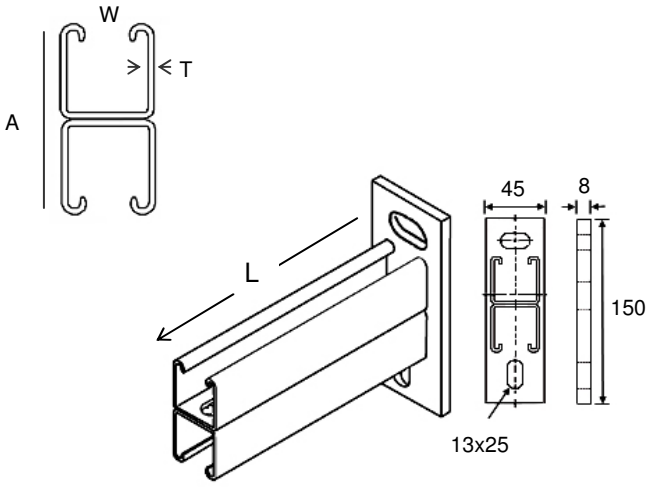

Part No	T	W	A	L	kg
GE-KDCD-20	2,0	41	83	100	0,84
GE-KDCD-21	2,0	41	83	150	1,05
GE-KDCD-22	2,0	41	83	200	1,25
GE-KDCD-23	2,0	41	83	225	1,35
GE-KDCD-24	2,0	41	83	300	1,65
GE-KDCD-25	2,0	41	83	400	2,10
GE-KDCD-26	2,0	41	83	450	2,30
GE-KDCD-27	2,0	41	83	500	2,50
GE-KDCD-28	2,0	41	83	600	2,90
GE-KDCD-29	2,0	41	83	750	3,50
GE-KDCD-30	2,0	41	83	900	4,15
GE-KDCD-31	2,5	41	83	100	0,97
GE-KDCD-32	2,5	41	83	150	1,25
GE-KDCD-33	2,5	41	83	200	1,50
GE-KDCD-34	2,5	41	83	225	1,65
GE-KDCD-35	2,5	41	83	300	2,05
GE-KDCD-36	2,5	41	83	400	2,60
GE-KDCD-37	2,5	41	83	450	2,90
GE-KDCD-38	2,5	41	83	500	3,15
GE-KDCD-39	2,5	41	83	600	3,70
GE-KDCD-40	2,5	41	83	750	4,50
GE-KDCD-41	2,5	41	83	900	5,30
GE-KDCD-42	2,5	41	83	1000	5,85
GE-KDCD-43	2,5	41	83	1200	6,90
GE-KDCD-44	2,5	41	83	1500	8,55

Material options: Stainless steel AISI 304 (L) (A2) / AISI 316 (L) (A4), ST-37-42 Mild Steel, Corten A, Pregalvanized steel, Aluminum
Finish options : Hot Dip Galvanized to EN 1461, Electrogalvanized to TS 149, Electrostatic Paint Coated, Prime coated

GE- KDH
C channel single bracket
C profil tekli konsol
Консоль

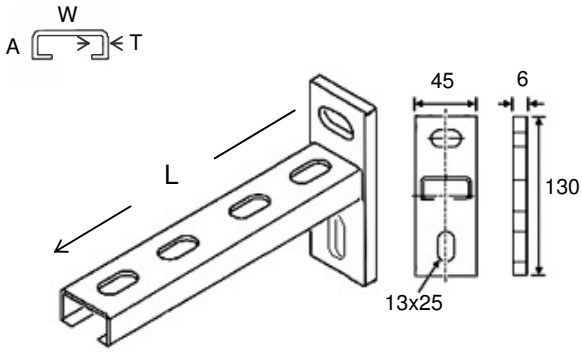

Part No	T	W	A	L	kg
GE-KDH-1	1,5	41	21	100	0,38
GE-KDH-2	1,5	41	21	200	0,49
GE-KDH-3	1,5	41	21	300	0,60
GE-KDH-4	1,5	41	21	400	0,70
GE-KDH-5	1,5	41	21	500	0,80
GE-KDH-6	1,5	41	21	600	0,90
GE-KDH-7	2,0	41	21	100	0,42
GE-KDH-8	2,0	41	21	200	0,56
GE-KDH-9	2,0	41	21	300	0,70
GE-KDH-10	2,0	41	21	400	0,84
GE-KDH-11	2,0	41	21	500	1,00
GE-KDH-12	2,0	41	21	600	1,12

GE- KDH
C channel single bracket
C profil tekli konsol
Консоль

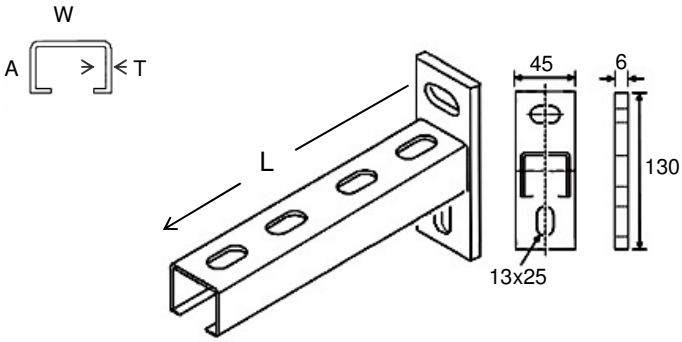

Part No	T	W	A	L	kg
GE-KDH-13	1,5	41	41	100	0,43
GE-KDH-14	1,5	41	41	200	0,58
GE-KDH-15	1,5	41	41	300	0,73
GE-KDH-16	1,5	41	41	400	0,88
GE-KDH-17	1,5	41	41	500	1,03
GE-KDH-18	1,5	41	41	600	1,18
GE-KDH-19	2,0	41	41	100	0,49
GE-KDH-20	2,0	41	41	200	0,69
GE-KDH-21	2,0	41	41	300	0,90
GE-KDH-22	2,0	41	41	400	1,10
GE-KDH-23	2,0	41	41	500	1,30
GE-KDH-24	2,0	41	41	600	1,50
GE-KDH-25	2,0	41	41	750	1,82
GE-KDH-26	2,0	41	41	900	2,12

HDG EG SS4 SS6 ESB APB

Material options: Stainless steel AISI 304 (L) (A2) / AISI 316 (L) (A4), ST-37-42 Mild Steel, Corten A, Pregalvanized steel, Aluminum
Finish options : Hot Dip Galvanized to EN 1461, Electrogalvanized to TS 149, Electrostatic Paint Coated, Prime coated

GE-KDHD
C channel bracket, back to back
C profil çiftli konsol
Консоль

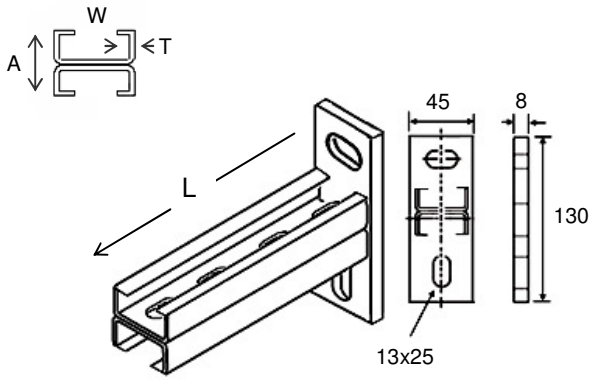

Part No	T	W	A	L	kg
GE-KDHD-1	1,5	41	43	100	0,59
GE-KDHD-2	1,5	41	43	200	0,80
GE-KDHD-3	1,5	41	43	300	1,00
GE-KDHD-4	1,5	41	43	400	1,22
GE-KDHD-5	1,5	41	43	500	1,43
GE-KDHD-6	1,5	41	43	600	1,64
GE-KDHD-7	2,0	41	43	100	0,66
GE-KDHD-8	2,0	41	43	200	0,94
GE-KDHD-9	2,0	41	43	300	1,22
GE-KDHD-10	2,0	41	43	400	1,50
GE-KDHD-11	2,0	41	43	500	1,78
GE-KDHD-12	2,0	41	43	600	2,06

GE- KDHD
C channel bracket, back to back
C profil çiftli konsol
Консоль

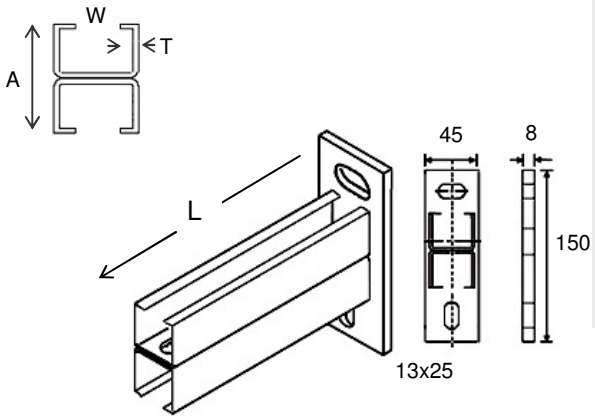

Part No	T	W	A	L	kg
GE-KDHD-13	1,5	41	83	100	0,73
GE-KDHD-14	1,5	41	83	200	1,00
GE-KDHD-15	1,5	41	83	300	1,33
GE-KDHD-16	1,5	41	83	400	1,63
GE-KDHD-17	1,5	41	83	500	1,95
GE-KDHD-18	1,5	41	83	600	2,25
GE-KDHD-19	2,0	41	83	100	0,84
GE-KDHD-20	2,0	41	83	200	1,25
GE-KDHD-21	2,0	41	83	300	1,66
GE-KDHD-22	2,0	41	83	400	2,07
GE-KDHD-23	2,0	41	83	500	2,48
GE-KDHD-24	2,0	41	83	600	2,90
GE-KDHD-25	2,0	41	83	750	3,50
GE-KDHD-26	2,0	41	83	900	4,12

HDG EG SS4 SS6 ESB APB

Material options: Stainless steel AISI 304 (L) (A2) / AISI 316 (L) (A4), ST-37-42 Mild Steel, Corten A, Pregalvanized steel, Aluminum
Finish options : Hot Dip Galvanized to EN 1461, Electrogalvanized to TS 149, Electrostatic Paint Coated, Prime coated

GE-TA-5
Ceiling bracket
Tavan askı
Потолочная консоль

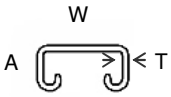

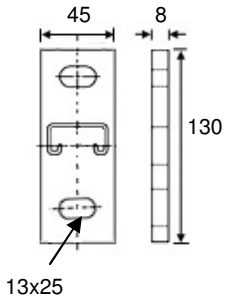

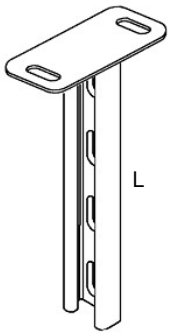

Part	T	W	A	L	kg
GE-TA-5-1	2	41	21	500	1,07
GE-TA-5-2	2	41	21	750	1,42
GE-TA-5-3	2	41	21	1000	1,77
GE-TA-5-4	2	41	21	1250	2,12

HDG EG SS4 SS6 ESB APB

GE-TA-6
Ceiling bracket
Tavan askı
Потолочная консоль

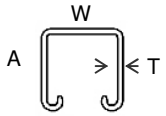

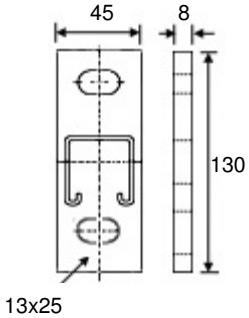

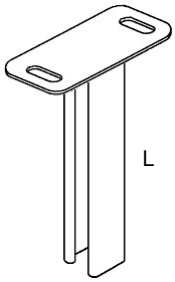

Part	T	W	A	L	kg
GE-TA-6-1	2	41	41	500	1,37
GE-TA-6-2	2	41	41	750	1,87
GE-TA-6-3	2	41	41	1000	2,37
GE-TA-6-4	2	41	41	1250	2,87

HDG EG SS4 SS6 ESB APB

GE-TA-7
Ceiling bracket
Tavan askı
Потолочная консоль

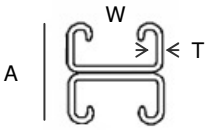

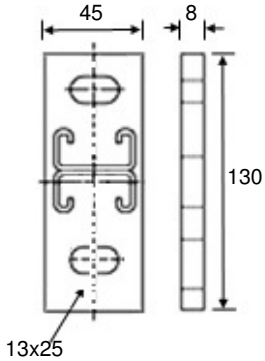

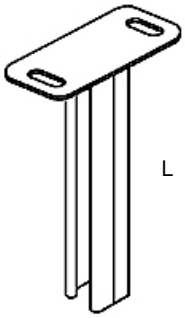

Part	T	W	A	L	kg
GE-TA-7-1	2	41	43	500	1,77
GE-TA-7-2	2	41	43	750	2,47
GE-TA-7-3	2	41	43	1000	3,17
GE-TA-7-4	2	41	43	1250	3,87
GE-TA-7-5	2	41	43	1500	4,57
GE-TA-7-6	2	41	43	2000	5,97

HDG EG SS4 SS6 ESB APB

GE-TA-8
Ceiling bracket
Tavan askı
Потолочная консоль

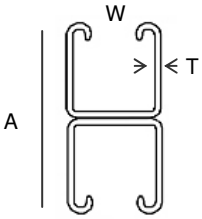

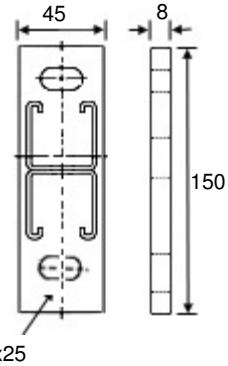

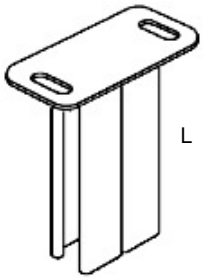

Part	T	W	A	L	kg
GE-TA-8-1	2	41	83	500	2,37
GE-TA-8-2	2	41	83	750	3,37
GE-TA-8-3	2	41	83	1000	4,37
GE-TA-8-4	2	41	83	1250	5,37
GE-TA-8-5	2	41	83	1500	6,37
GE-TA-8-6	2	41	83	2000	8,37

HDG EG SS4 SS6 ESB APB

Material options: Stainless steel AISI 304 (L) (A2) / AISI 316 (L) (A4), ST-37-42 Mild Steel, Corten A, Pregalvanized steel, Aluminum
Finish options : Hot Dip Galvanized to EN 1461, Electrogalvanized to TS 149, Electrostatic Paint Coated, Prime coated

GE-TA-9
Ceiling bracket
Tavan askı
Потолочная консоль

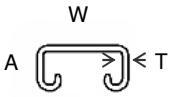

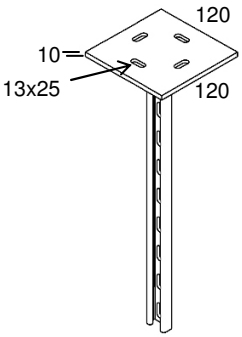

Part	T	W	A	L	kg
GE-TA-9-1	2	41	21	500	2,02
GE-TA-9-2	2	41	21	750	2,50
GE-TA-9-3	2	41	21	1000	3,00
GE-TA-9-4	2	41	21	1250	3,50

HDG EG SS4 SS6 ESB APB

GE-TA-10
Ceiling bracket
Tavan askı
Потолочная консоль

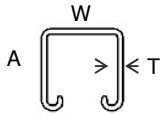

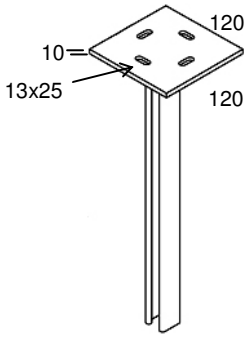

Part	T	W	A	L	kg
GE-TA-10-1	2	41	41	500	2,50
GE-TA-10-2	2	41	41	750	3,10
GE-TA-10-3	2	41	41	1000	3,70
GE-TA-10-4	2	41	41	1250	4,30

HDG EG SS4 SS6 ESB APB

GE-TA-11
Ceiling bracket
Tavan askı
Потолочная консоль

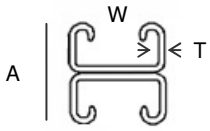

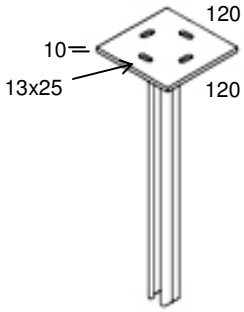

Part	T	W	A	L	kg
GE-TA-11-1	2	41	43	500	2,88
GE-TA-11-2	2	41	43	750	3,82
GE-TA-11-3	2	41	43	1000	4,76
GE-TA-11-4	2	41	43	1250	5,68
GE-TA-11-5	2	41	43	1500	6,64
GE-TA-11-6	2	41	43	2000	8,52

HDG EG SS4 SS6 ESB APB

GE-TA-12
Ceiling bracket
Tavan askı
Потолочная консоль

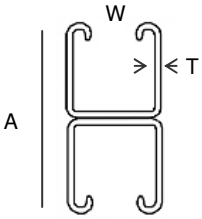

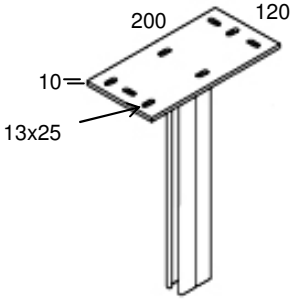

Part	T	W	A	L	kg
GE-TA-12-1	2	41	83	500	4,50
GE-TA-12-2	2	41	83	750	6,25
GE-TA-12-3	2	41	83	1000	7,10
GE-TA-12-4	2	41	83	1250	7,95
GE-TA-12-5	2	41	83	1500	9,80
GE-TA-12-6	2	41	83	2000	12,50

HDG EG SS4 SS6 ESB APB

Material options: Stainless steel AISI 304 (L) (A2) / AISI 316 (L) (A4), ST-37-42 Mild Steel, Corten A, Pregalvanized steel, Aluminum
Finish options : Hot Dip Galvanized to EN 1461, Electrogalvanized to TS 149, Electrostatic Paint Coated, Prime coated

GE-BRCC-1
Custom bracket
Özel konsol
Кронштейн поддержки

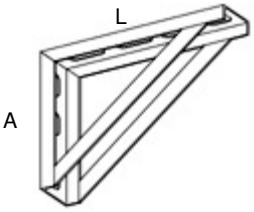

GE-BRCC-2
Custom bracket
Özel konsol
Кронштейн поддержки

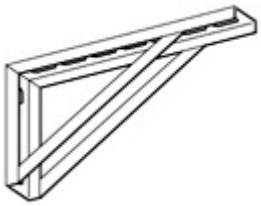

GE-BRCC-3
Custom bracket
Özel konsol
Кронштейн поддержки

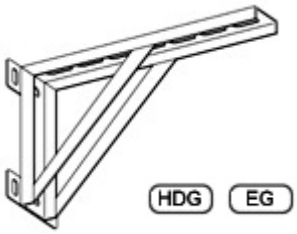

HDG EG SS4 SS6 ESB APB

GE-EXTR
Support for bracket
Konsol destek
Кронштейн поддержки

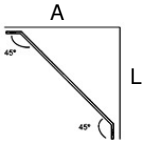

Part No	T	W	A	L	kg
GE-EXTR-1	5	40	200	280	0,50
GE-EXTR-2	5	40	270	380	0,67
GE-EXTR-3	5	40	350	495	0,86

HDG EG SS4 SS6 ESB APB

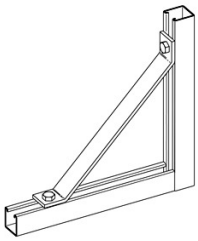

GE-HBR
Hook bracket
Kanca tipi konsol
Консоль

Part No	T	W	A	L	kg
GE-HBR-20	6	25	100	40	0.30
GE-HBR-30	6	50	100	40	0.60

HDG EG SS4 SS6 ESB APB

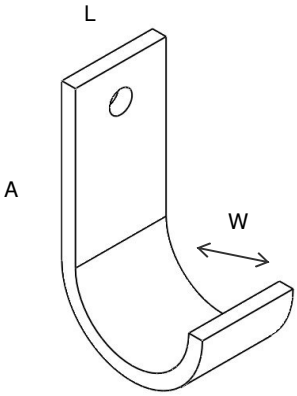

Material options: Stainless steel AISI 304 (L) (A2) / AISI 316 (L) (A4), ST-37-42 Mild Steel, Corten A, Pregalvanized steel, Aluminum
Finish options : Hot Dip Galvanized to EN 1461, Electrogalvanized to TS 149, Electrostatic Paint Coated, Prime coated

GE-OBT
Outside bracket
Dıştan kavrama konsolu
Консоль

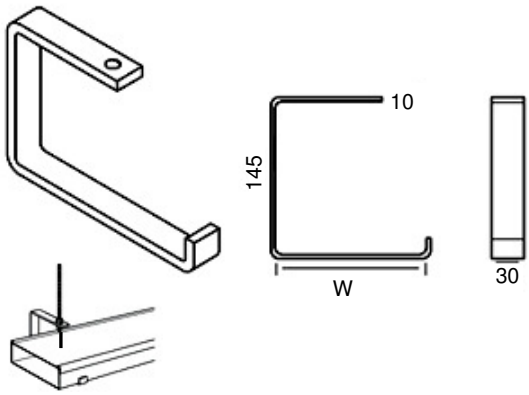

Part No	T	A	L	W	kg
GE-OBT-50	10	145	30	50	0.50
GE-OBT-70	10	145	30	70	0.56
GE-OBT-100	10	145	30	100	0.75
GE-OBT-120	10	145	30	120	0.80
GE-OBT-150	10	145	30	150	0.90
GE-OBT-200	10	145	30	200	1.15
GE-OBT-250	10	145	30	250	1.35
GE-OBT-300	10	145	30	300	1.50

HDG EG SS4 SS6 ESB APB

GE-AE-9
Hanger bracket
Askı elemanı
Лоток приостановке части

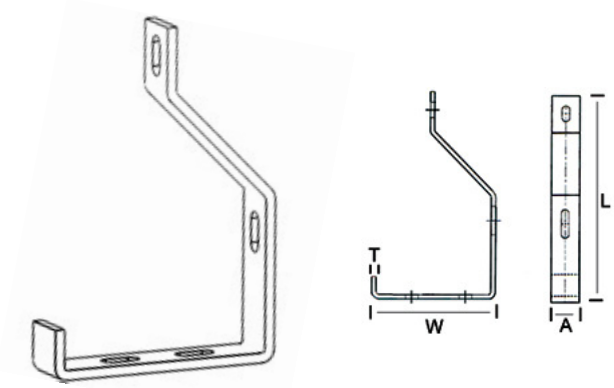

Part No	T	W	A	L	kg
GE-AE-9-1	4	50	25	180	0,25
GE-AE-9-2	4	100	25	180	0,28
GE-AE-9-3	4	150	25	180	0,31
GE-AE-9-4	4	200	25	180	0,34

HDG EG SS4 SS6 ESB APB

Used as support bracket on structural concrete beams.
Kiriş altı bağlantılarda destek konsolu olarak kullanılır.
В балке используется при сборке.

GE-CBR
Ceiling bracket
Tavan konsolu
Консоль

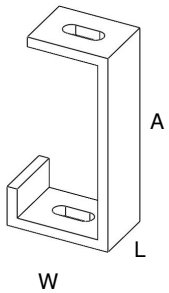

GE-WBR
Wall bracket
Duvar konsolu
Консоль

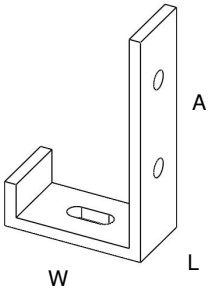

Part No	T	L	A	W	kg
GE-CBR-20	5	30	100	60	0,25
GE-CBR-30	5	30	100	80	0,30
GE-CBR-50	5	30	100	110	0,35
GE-WBR-50	5	30	100	60	0.20
GE-WBR-70	5	30	100	80	0.23
GE-WBR-100	5	30	100	110	0.26
GE-WBR-150	5	30	100	160	0.32

HDG EG SS4 SS6 ESB APB

Material options: Stainless steel AISI 304 (L) (A2) / AISI 316 (L) (A4), ST-37-42 Mild Steel, Corten A, Pregalvanized steel, Aluminum
Finish options : Hot Dip Galvanized to EN 1461, Electrogalvanized to TS 149, Electrostatic Paint Coated, Prime coated

GE-CKSL
Short nut, springless
Kilitli somun, yaysız
неподрессоренный гайка

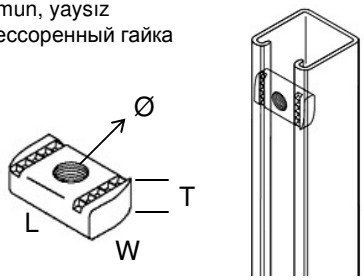

Part No	T	W	Ø	L	kg
GE-CKSL-1	6	20	M6	35	0.027
GE-CKSL-2	6	20	M8	35	0.027
GE-CKSL-3	6	20	M10	35	0.027
GE-CKSL-4	6	20	M12	35	0.027
GE-CKSL-5	8	20	M6	35	0.037
GE-CKSL-6	8	20	M8	35	0.037
GE-CKSL-7	8	20	M10	35	0.037
GE-CKSL-8	8	20	M12	35	0.037

EG SS4 SS6

GE-CKSK
Spring nut, short
Yaylı somun, kısa
Весна гайка

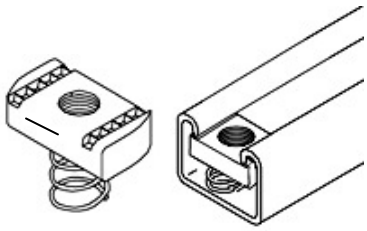

Part No	T	W	Ø	L	kg
GE-CKSK-1	6	20	M6	35	0,030
GE-CKSK-2	6	20	M8	35	0,030
GE-CKSK-3	6	20	M10	35	0,030
GE-CKSK-4	6	20	M12	35	0,030
GE-CKSK-5	8	20	M6	35	0,040
GE-CKSK-6	8	20	M8	35	0,040
GE-CKSK-7	8	20	M10	35	0,040
GE-CKSK-8	8	20	M12	35	0,040

EG SS4 SS6

GE-CKSO
Spring nut
Yaylı somun
Весна гайка

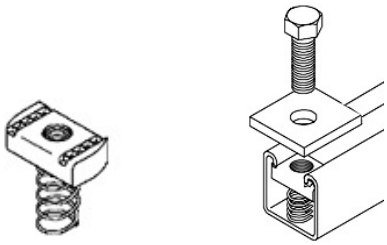

Part No	T	W	Ø	L	kg
GE-CKSO-1	6	20	M6	35	0,035
GE-CKSO-2	6	20	M8	35	0,035
GE-CKSO-3	6	20	M10	35	0,035
GE-CKSO-4	6	20	M12	35	0,035
GE-CKSO-5	8	20	M6	35	0,045
GE-CKSO-6	8	20	M8	35	0,045
GE-CKSO-7	8	20	M10	35	0,045
GE-CKSO-8	8	20	M12	35	0,045

EG SS4 SS6

GE-CKST
T bolt
T civata
Болтов

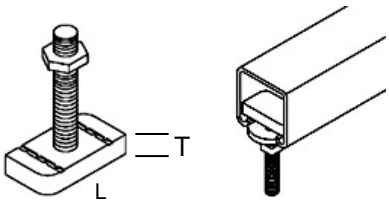

Part No	T	W	Size	L	kg
GE-CKST-6	6	20	M6x40	35	0,040
GE-CKST-8	6	20	M8x40	35	0,045
GE-CKST-10	8	20	M10x40	35	0,070
GE-CKST-12	8	20	M12x40	35	0.080

EG SS4 SS6

L: 50mm standard, also 40mm / 60mm / 70mm / 80mm upon request.

GERPAAS®

EN Support systems
FR Supportage
D Tragsystemen
RU Поддержка систем
TR Destek sistemleri

Material options: Stainless steel AISI 304 (L) (A2) / AISI 316 (L) (A4), ST-37-42 Mild Steel, Corten A, Pregalvanized steel, Aluminum
Finish options : Hot Dip Galvanized to EN 1461, Electrogalvanized to TS 149, Electrostatic Paint Coated, Prime coated

LIGHTING CHANNELS

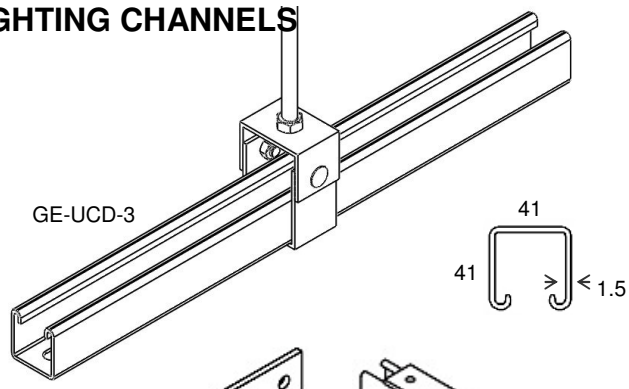

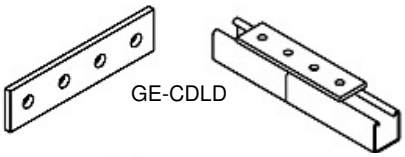

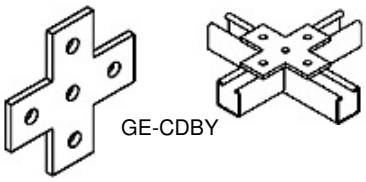

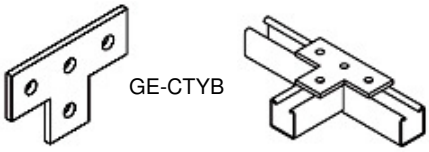

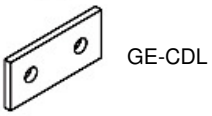

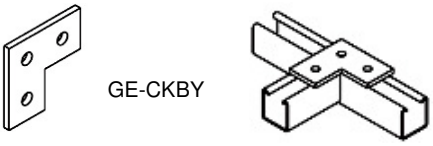

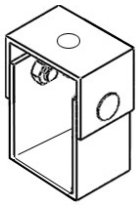

RECOMMENDED LOADS FOR STRUT CHANNELS

Span (mm)	41x21x2.0	41x21x2.5	41x21x2.5	41x41x2.0	41x41x2.5	41x41x2.5	41x21x2.0	41x21x2.5	41x41x2.0	41x41x2.5
	Perforated	Perforated	non-perforated	Perforated	Perforated	Non-perforated	Back-to-back	Back-to-back	Back-to-back	Back-to-back
500	210	250	270	640	780	825	610	750	1820	2300
750	105	120	145	430	520	555	415	500	1250	1500
1000	55	65	80	320	390	410	310	375	950	1100
1250	35	40	50	215	265	305	205	245	760	980
1500	25	30	35	150	180	210	140	170	635	750
1750	15	20	25	110	135	155	105	125	540	650
2000	15	15	20	80	100	120	80	95	475	570
2250	10	12	15	65	80	95	60	75	385	475
2500	10	10	10	55	65	75	50	60	315	385
2750	8	9	10	45	55	60	40	50	260	320
3000	7	8	8	35	45	50	35	40	215	265

Uniformly distributed load on 2 supports
Maximum deflection at 1/100 span
Stress: 160 N/mm²
Limit of elasticity: 21 kPA

Material options: Stainless steel AISI 304 (L) (A2) / AISI 316 (L) (A4), ST-37-42 Mild Steel, Corten A, Pregalvanized steel, Aluminum
Finish options : Hot Dip Galvanized to EN 1461, Electrogalvanized to TS 149, Electrostatic Paint Coated, Prime coated

GE-CKTB

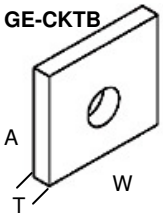

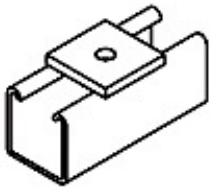

Part No	T	W	A	kg
GE-CKTB-1	5	41	41	0,07
GE-CKTB-2	3	41	41	0,04

HDG EG SS4 SS6 ESB APB

GE-CKTK-D

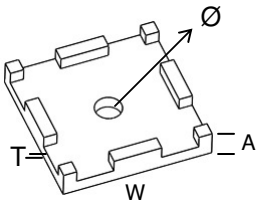

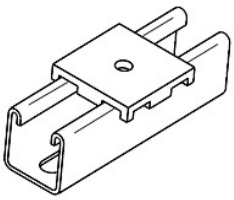

Part No	T	W	A	Ø	kg
GE-CKTK-D	5	57	11	13	0,17

HDG EG SS4 SS6 ESB APB

GE-CKTK-P

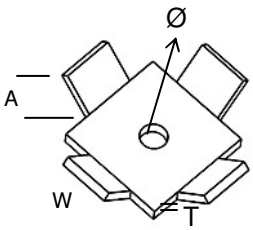

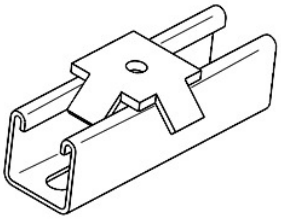

Part No	T	W	A	Ø	kg
GE-CKTK-P	5	67	18	13	0,13

HDG EG SS4 SS6 ESB APB

GE-CMTE

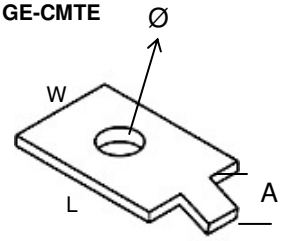

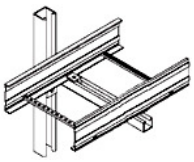

Part No	T	W	A	L	Ø	kg
GE-CMTE	5	42	10	50	13	0,085

HDG EG SS4 SS6 ESB APB

GE-CDTE

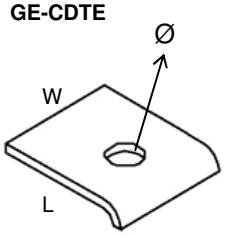

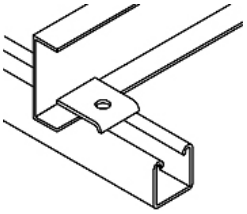

Part No	T	W	L	Ø	kg
GE-CDTE	3	42	46	13	0,045

HDG EG SS4 SS6 ESB APB

GE-CYTE

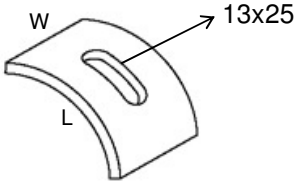

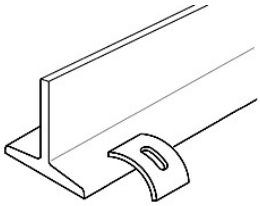

Part No	T	W	L	kg
GE-CYTE	5	40	60	0,093

HDG EG SS4 SS6 ESB APB

GERPAAS®

EN Support systems
FR Supportage
D Tragsystemen
RU Поддержка систем
Destek sistemleri

Material options: Stainless steel AISI 304 (L) (A2) / AISI 316 (L) (A4), ST-37-42 Mild Steel, Corten A, Pregalvanized steel, Aluminum
Finish options : Hot Dip Galvanized to EN 1461, Electrogalvanized to TS 149, Electrostatic Paint Coated, Prime coated

GE-CDL

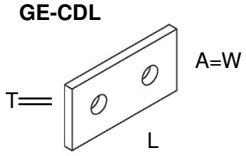

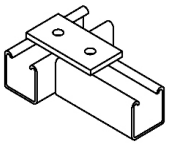

Part No	T	W	A	L	kg
GE-CDL	5	42	42	84	0,15

HDG EG SS4 SS6 ESB APB

GE-CDLS

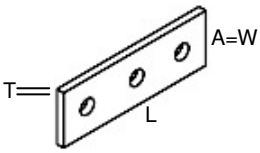

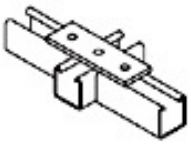

Part No	T	W	A	L	kg
GE-CDLS	5	42	42	125	0,22

HDG EG SS4 SS6 ESB APB

GE- CDLD

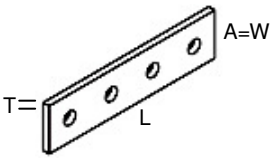

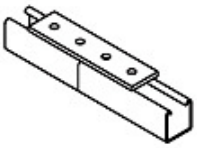

Part No	T	W	A	L	kg
GE-CDLD	5	42	42	150	0,25

HDG EG SS4 SS6 ESB APB

GE-CDLF

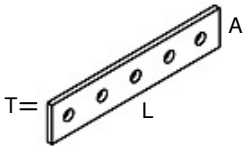

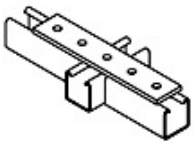

Part No	T	W	A	L	kg
GE-CDLF	5	42	42	210	0,35

HDG EG SS4 SS6 ESB APB

GE-CLTB

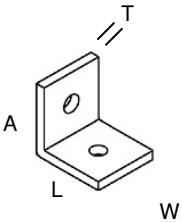

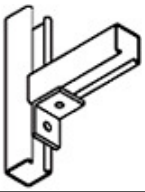

Part No	T	W	A	L	kg
GE-CLTB	5	42	48	48	0,17

HDG EG SS4 SS6 ESB APB

GE-CLIT

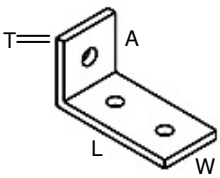

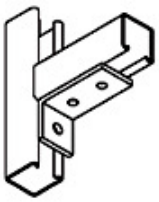

Part No	T	W	A	L	kg
GE-CLIT	5	42	42	90	0,22

HDG EG SS4 SS6 ESB APB

GERPAAS®

EN Support systems
FR Supportage
D Tragsystemen
RU Поддержка систем
TR Destek sistemleri

Material options: Stainless steel AISI 304 (L) (A2) / AISI 316 (L) (A4), ST-37-42 Mild Steel, Corten A, Pregalvanized steel, Aluminum
Finish options : Hot Dip Galvanized to EN 1461, Electrogalvanized to TS 149, Electrostatic Paint Coated, Prime coated

GE-CLUB

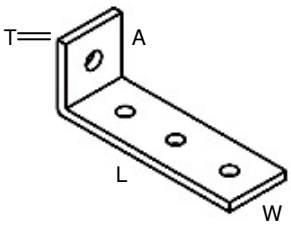

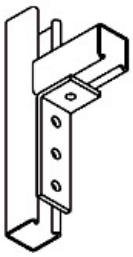

Part No	T	W	A	L	kg
GE-CLUB	5	42	42	120	0,27

HDG EG SS4 SS6 ESB APB

GE-CKBD

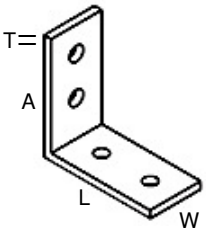

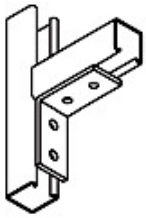

Part No	T	W	A	L	kg
GE-CKBD	5	42	80	80	0,25

HDG EG SS4 SS6 ESB APB

GE-CABD

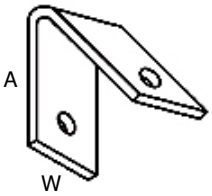

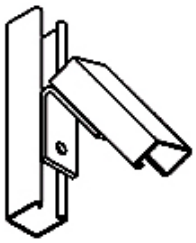

Part No	T	W	A	L	kg
GE-CABD	5	42	75	75	0,25

HDG EG SS4 SS6 ESB APB

GE-CABI

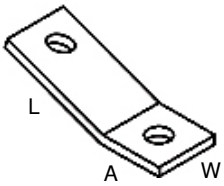

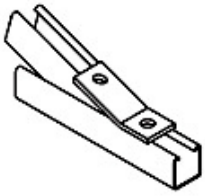

Part No	T	W	L	kg
GE-CABI	5	42	129	0,22

HDG EG SS4 SS6 ESB APB

GE-CABG

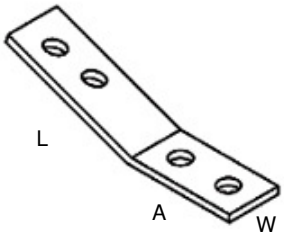

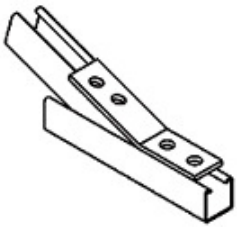

Part No	T	W	L	kg
GE-CABG	5	42	180	0,30

HDG EG SS4 SS6 ESB APB

GERPAAS®

EN Support systems
FR Supportage
D Tragsystemen
RU Поддержка систем
TR Destek sistemleri

Material options: Stainless steel AISI 304 (L) (A2) / AISI 316 (L) (A4), ST-37-42 Mild Steel, Corten A, Pregalvanized steel, Aluminum
Finish options : Hot Dip Galvanized to EN 1461, Electrogalvanized to TS 149, Electrostatic Paint Coated, Prime coated

GE-CKBY

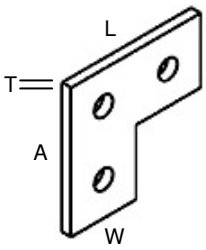

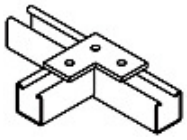

Part No	T	W	A	L	kg
GE-CKBY	5	42	80	80	0,20

HDG EG SS4 SS6 ESB APB

GE-CTYB

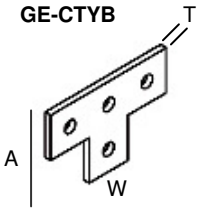

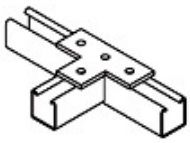

Part No	T	W	A	L	kg
GE-CTYB	5	42	90	125	0,30

HDG EG SS4 SS6 ESB APB

GE-CTDB

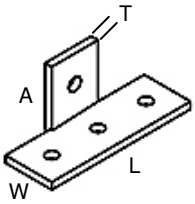

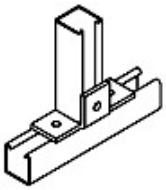

Part No	T	W	A	L	kg
GE-CTDB	5	42	50	125	0,30

HDG EG SS4 SS6 ESB APB

GE-CTTD

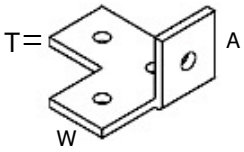

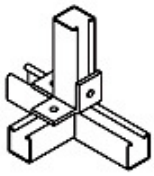

Part No	T	W	A	L	kg
GE-CTTD	5	42	50	90	0,30

HDG EG SS4 SS6 ESB APB

GE-CDBY

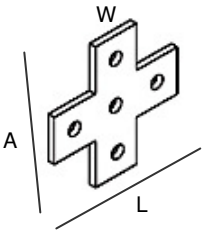

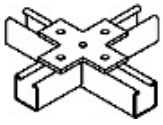

Part No	T	W	A	L	kg
GE-CDBY	5	42	125	125	0,35

HDG EG SS4 SS6 ESB APB

Material options: Stainless steel AISI 304 (L) (A2) / AISI 316 (L) (A4), ST-37-42 Mild Steel, Corten A, Pregalvanized steel, Aluminum
Finish options : Hot Dip Galvanized to EN 1461, Electrogalvanized to TS 149, Electrostatic Paint Coated, Prime coated

GE-CTGY

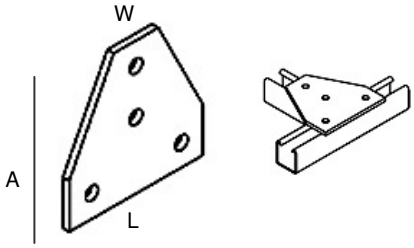

Part No	T	W	A	L	kg
GE-CTGY	5	42	136	90	0,40

HDG EG SS4 SS6 ESB APB

GE-CGDB

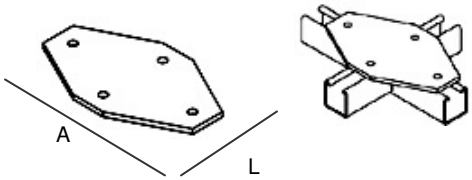

Part No	T	W	A	L	kg
GE-CGDB	5	42	136	90	0,48

HDG EG SS4 SS6 ESB APB

GE-CUKB

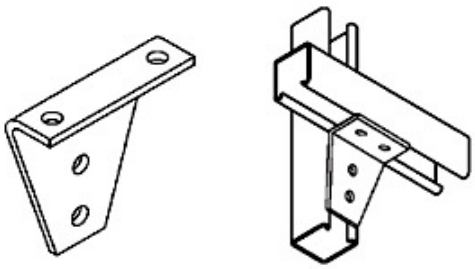

Part No	T	W	A	L	kg
GE-CUKB	5	42	120	120	0,50

HDG EG SS4 SS6 ESB APB

GE-COSP
Channel clamping set (column support)
Profil bağlama kelepçesi
Профиль фитинги

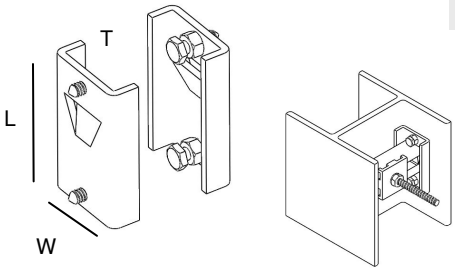

Part No	T	Channel type	W	L	kg
GE-COSP-1	5	41x41x2.5mm	62	100	0.95

Supplied with bolts and nuts assembled.

HDG EG SS4 SS6 ESB APB

Material options: Stainless steel AISI 304 (L) (A2) / AISI 316 (L) (A4), ST-37-42 Mild Steel, Corten A, Pregalvanized steel, Aluminum
Finish options : Hot Dip Galvanized to EN 1461, Electrogalvanized to TS 149, Electrostatic Paint Coated, Prime coated

GE-CZBS

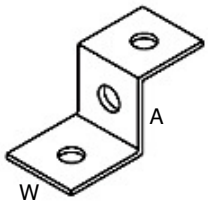

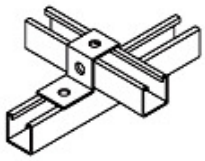

Part No	T	W	A	L	kg
GE-CZBS	5	42	46	94	0,22

HDG EG SS4 SS6 ESB APB

GE-CZBD

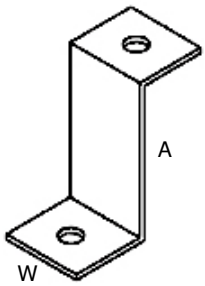

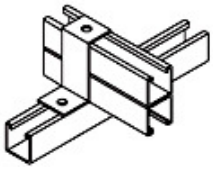

Part No	T	W	A	L	kg
GE-CZBD	5	42	87	94	0,28

HDG EG SS4 SS6 ESB APB

GE-COTB

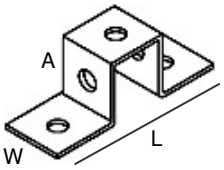

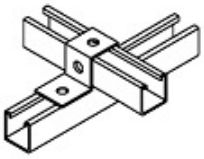

Part No	T	W	A	L	kg
GE-COTB	5	42	46	130	0,36

HDG EG SS4 SS6 ESB APB

GE-COCB

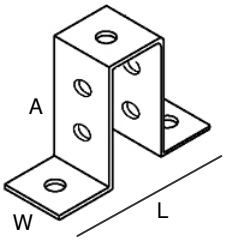

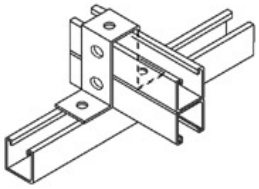

Part No	T	W	A	L	kg
GE-COCB	5	42	87	136	0, 50

HDG EG SS4 SS6 ESB APB

GE-COGB

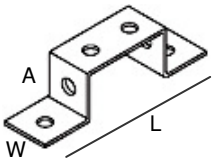

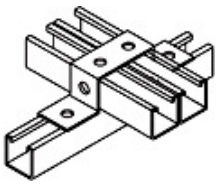

Part No	T	W	A	L	kg
GE-COGB	5	42	46	172	0,43

HDG EG SS4 SS6 ESB APB

Material options: Stainless steel AISI 304 (L) (A2) / AISI 316 (L) (A4), ST-37-42 Mild Steel, Corten A, Pregalvanized steel, Aluminum
Finish options : Hot Dip Galvanized to EN 1461, Electrogalvanized to TS 149, Electrostatic Paint Coated, Prime coated

GE-CTBS

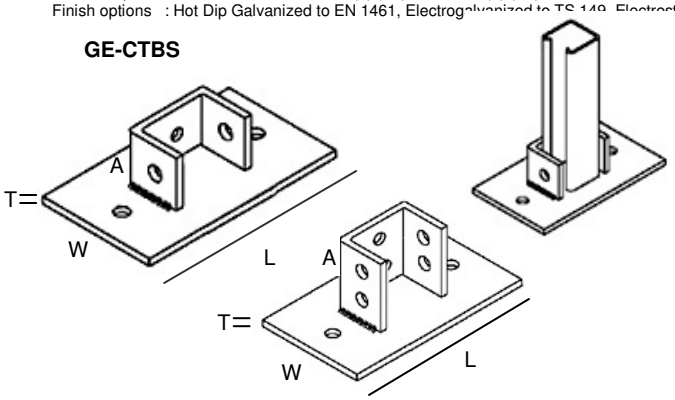

Part No	T	W	A	L	kg
GE-CTBS-1	5	100	40	140	0,76
GE-CTBS-2	5	100	89	160	1,11

HDG EG SS4 SS6 ESB APB

GE-CTBD

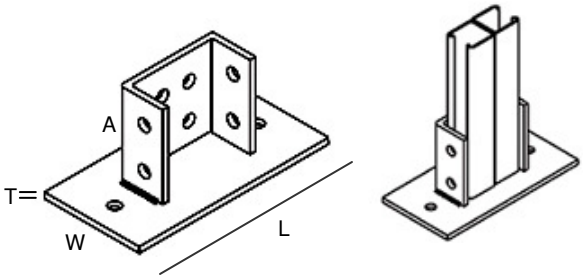

Part No	T	W	A	L	kg
GE-CTBD	5	100	100	200	1,50

HDG EG SS4 SS6 ESB APB

GE-CTIB

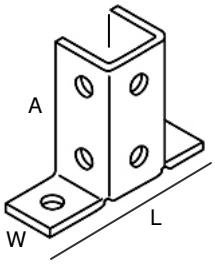

GE-CTIB-1

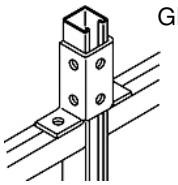

GE-CTIB-2

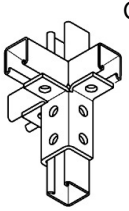

Part No	T	W	A	L	kg
GE-CTIB-1	5	41	98	137	0.60
GE-CTIB-2	5	41	98	137	0,70

HDG EG SS4 SS6 ESB APB

GE-CKBP

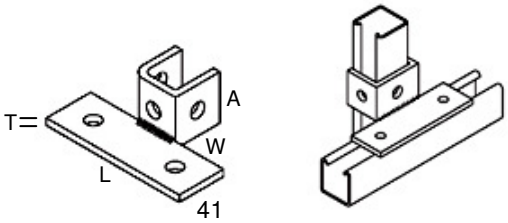

Part No	T	W	A	L	kg
GE-CKBP	5	47	41	126	0,45

HDG EG SS4 SS6 ESB APB

Material options: Stainless steel AISI 304 (L) (A2) / AISI 316 (L) (A4), ST-37-42 Mild Steel, Corten A, Pregalvanized steel, Aluminum
Finish options : Hot Dip Galvanized to EN 1461, Electrogalvanized to TS 149, Electrostatic Paint Coated, Prime coated

GE-CTDK

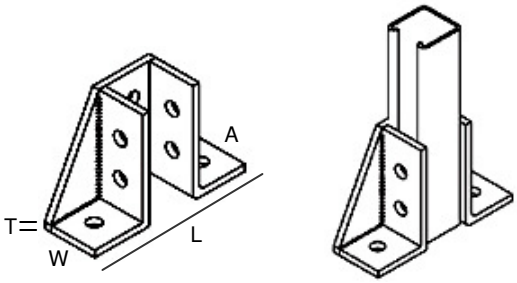

Part No	T	W	A	L	kg
GE-CTDK	5	48	120	146	1,10

HDG EG SS4 SS6 ESB APB

GE-CTBK

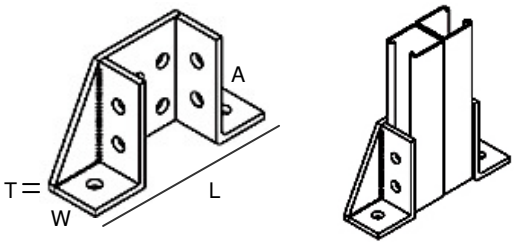

Part No	T	W	A	L	kg
GE-CTBK	5	48	120	187	1,20

HDG EG SS4 SS6 ESB APB

GE-CTTK

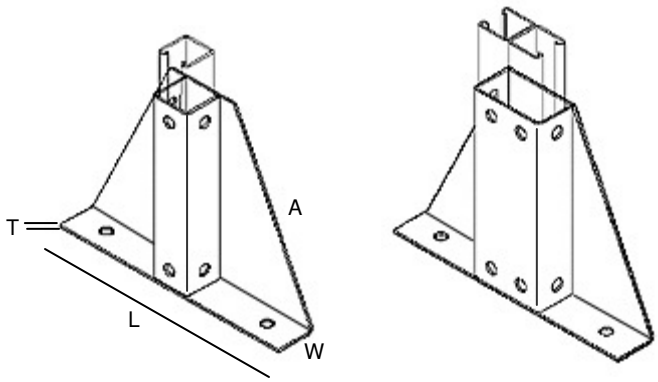

Part No	T	W	A	L	kg
GE-CTTK-1	3	49	200	300	1,10
GE-CTTK-2	3	49	200	300	1,70

HDG EG SS4 SS6 ESB APB

GE-CKKB

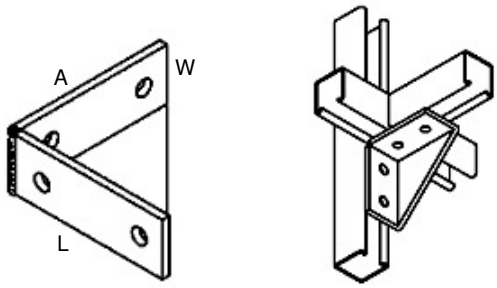

Part No	T	W	A	L	kg
GE-CKKB	5	42	102	102	0,52

HDG EG SS4 SS6 ESB APB

Material options: Stainless steel AISI 304 (L) (A2) / AISI 316 (L) (A4), ST-37-42 Mild Steel, Corten A, Pregalvanized steel, Aluminum
Finish options : Hot Dip Galvanized to EN 1461, Electrogalvanized to TS 149, Electrostatic Paint Coated, Prime coated

GE-CBTE

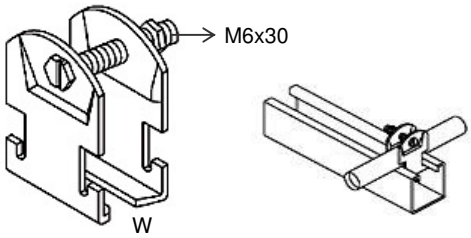

Part No	T	W	A	L	kg
GE-CBTE-1	1.5	½”	-	-	0.04
GE-CBTE-2	1.5	¾”	-	-	0.05
GE-CBTE-3	1.5	1”	-	-	0.05

HDG EG SS4 SS6 ESB APB

GE-CSKR

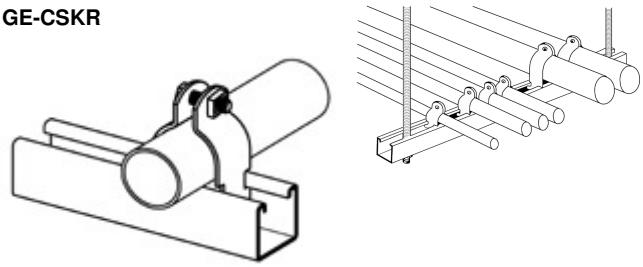

Part No	T	W	A	L	kg
GE-CSKR-1	1.5	½”	-	-	0.04
GE-CSKR-2	1.5	¾”	-	-	0.05
GE-CSKR-3	1.5	1”	-	-	0.05
GE-CSKR-4	1.5	1½”	-	-	0,06

HDG EG SS4 SS6 ESB APB

GE-CIBS

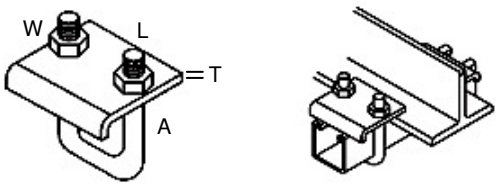

Part No	T	W	A	L	kg
GE-CIBS	5	60	90	75	0,35

HDG EG SS4 SS6 ESB APB

GE-CIBD

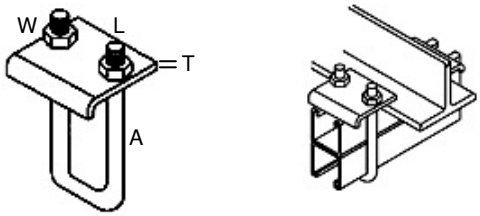

Part No	T	W	A	L	kg
GE-CIBD	5	60	125	75	0,38

HDG EG SS4 SS6 ESB APB

Material options: Stainless steel AISI 304 (L) (A2) / AISI 316 (L) (A4), ST-37-42 Mild Steel, Corten A, Pregalvanized steel, Aluminum
Finish options : Hot Dip Galvanized to EN 1461, Electrogalvanized to TS 149, Electrostatic Paint Coated, Prime coated

GE-KA
Hanger bracket
Askı konsolu
Консоль

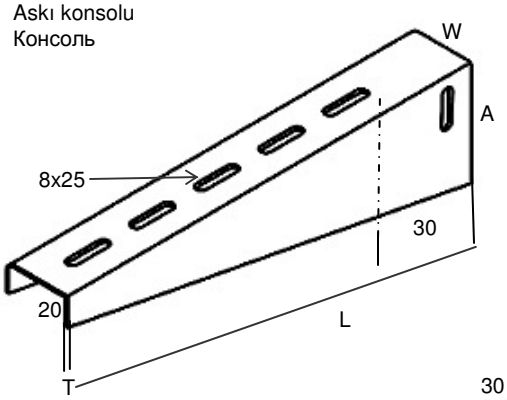

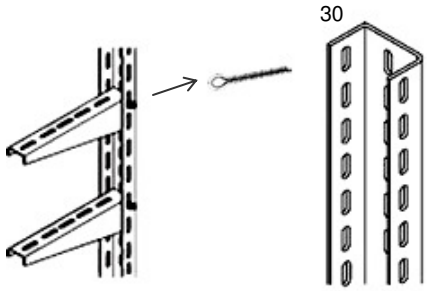

Part No	T	W	A	L	kg
GE-KA-5	1,5	40	60	80	0,11
GE-KA-7	1,5	40	60	100	0,14
GE-KA-10	1,5	40	60	130	0,18
GE-KA-12	1,5	40	60	150	0,22
GE-KA-15	1,5	40	60	180	0,25
GE-KA-20	1,5	40	60	230	0,32
GE-KA-22	1,5	40	60	255	0,35
GE-KA-25	1,5	40	60	280	0,38
GE-KA-30	1,5	40	60	330	0,45
GE-KA-40	2,0	40	75	440	0,86
GE-KA-45	2,0	40	75	480	0,96
GE-KA-50	2,0	40	75	530	1,06
GE-KA-60	2,0	40	75	630	1,20
GE-KA-75	2,0	40	75	780	1,56
GE-KA-90	2,0	40	75	930	1,86

HDG PG EG SS4 SS6 ESB APB

GE-KAA
Hanger bracket
Askı konsolu
Консоль

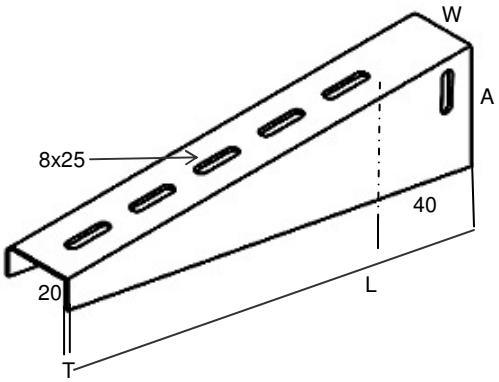

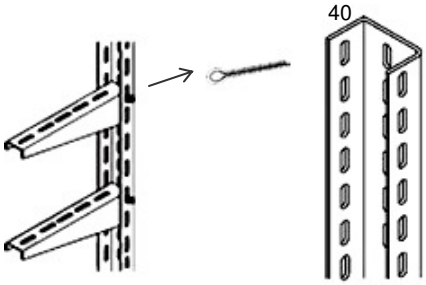

Part No	T	W	A	L	kg
GE-KAA-10	1,5	50	60	140	0,21
GE-KAA-15	1,5	50	60	190	0,28
GE-KAA-20	1,5	50	60	240	0,36
GE-KAA-22	1,5	50	60	265	0,40
GE-KAA-30	2,0	50	75	340	0,75
GE-KAA-40	2,0	50	75	440	0,98
GE-KAA-45	2,0	50	75	490	1,10
GE-KAA-50	2,5	50	90	540	1,64
GE-KAA-60	2,5	50	90	640	1,95
GE-KAA-75	3,0	50	90	790	2,85
GE-KAA-90	3,0	50	90	940	3,40

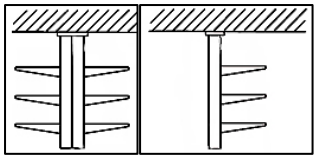

HDG PG EG SS4 SS6 ESB APB

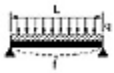

Material options: Stainless steel AISI 304 (L) (A2) / AISI 316 (L) (A4), ST-37-42 Mild Steel, Corten A, Pregalvanized steel, Aluminum
Finish options : Hot Dip Galvanized to EN 1461, Electrogalvanized to TS 149, Electrostatic Paint Coated, Prime coated

GE-KD
Wall bracket
Duvar konsolu
Консоль

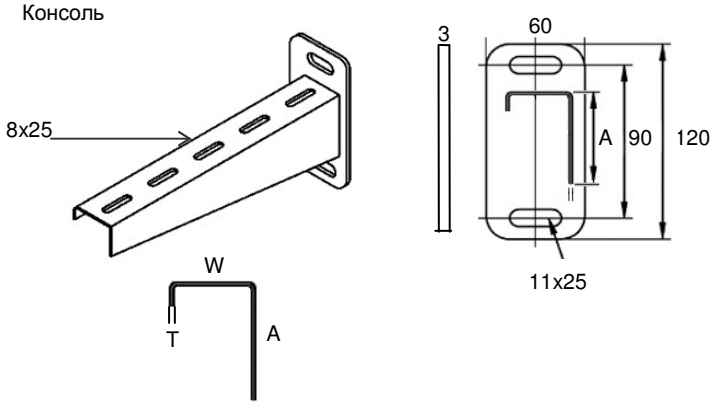

Part No	T	W	A	L	kg
GE-KD-5	1,5	40	50	50	0,23
GE-KD-7	1,5	40	50	70	0,25
GE-KD-10	1,5	40	50	100	0,28
GE-KD-12	1,5	40	50	120	0,30
GE-KD-15	1,5	40	50	150	0,34
GE-KD-20	1,5	40	50	200	0,39
GE-KD-22	1,5	40	50	225	0,42
GE-KD-25	1,5	40	50	250	0,45
GE-KD-30	1,5	40	50	300	0,50
GE-KD-40	2,0	40	60	400	0,89
GE-KD-45	2,0	40	60	450	0,97
GE-KD-50	2,0	40	60	500	1,05
GE-KD-60	2,0	40	60	600	1,21

HDG EG SS4 SS6 ESB APB

GE-KDA
Wall bracket, heavy duty
Duvar konsolu, ağır hizmet tipi
Консоль, большой грузоподъемности

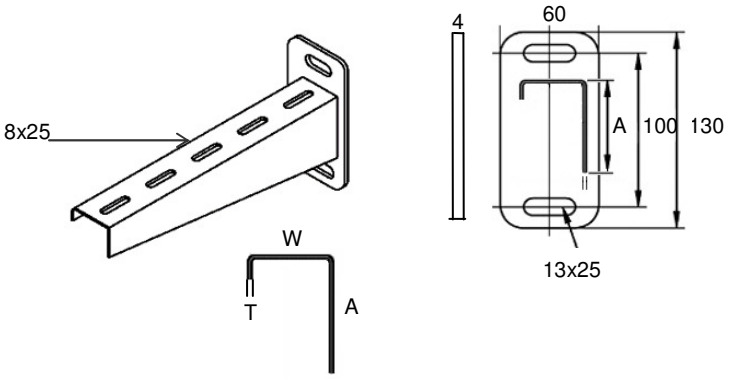

Part No	T	W	A	L	kg
GE-KDA-10	2	40	60	110	0,41
GE-KDA-15	2	40	60	160	0,48
GE-KDA-20	2	40	60	210	0,55
GE-KDA-22	2	40	60	235	0,59
GE-KDA-25	2	40	60	260	0,63
GE-KDA-30	2	40	60	310	0,68
GE-KDA-40	2,5	50	60	410	1,15
GE-KDA-45	2,5	50	60	460	1,26
GE-KDA-50	2,5	50	60	510	1,37
GE-KDA-60	3	50	70	610	1,80
GE-KDA-75	3	50	70	760	2,15
GE-KDA-90	3	50	70	910	2,54

HDG EG SS4 SS6 ESB APB

GE-KDEA
Wall bracket,extra heavy duty
Duvar konsolu, ekstra ağır hizmet tipi
Консоль, большой грузоподъемности

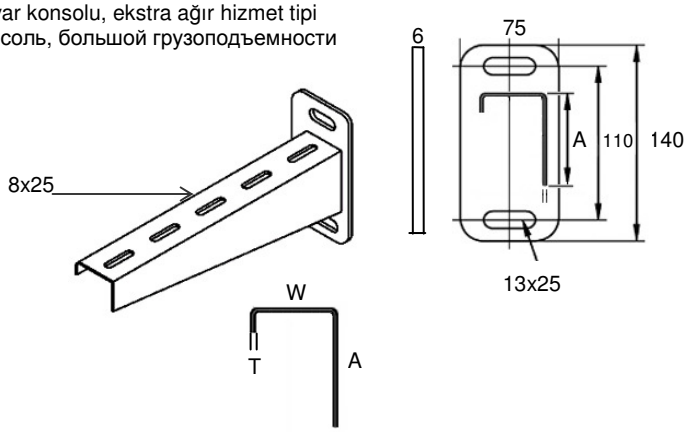

Part No	T	W	A	L	kg
GE-KDEA-10	2	40	60	110	0,66
GE-KDEA-15	2	40	60	160	0,73
GE-KDEA-20	2	40	60	210	0,80
GE-KDEA-22	2	40	60	235	0,84
GE-KDEA-25	2	40	60	260	0,88
GE-KDEA-30	2	40	60	310	0,93
GE-KDEA-40	2,5	50	60	410	1,40
GE-KDEA-45	2,5	50	60	460	1,51
GE-KDEA-50	2,5	50	60	510	1,62
GE-KDEA-60	3	50	70	610	2,05
GE-KDEA-75	3	50	70	760	2,40
GE-KDEA-90	3	50	70	910	2,79

HDG EG SS4 SS6 ESB APB

Material options: Stainless steel AISI 304 (L) (A2) / AISI 316 (L) (A4), ST-37-42 Mild Steel, Corten A, Pregalvanized steel, Aluminum
Finish options : Hot Dip Galvanized to EN 1461, Electrogalvanized to TS 149, Electrostatic Paint Coated, Prime coated

GE-KDU
U konsol
U bracket
Консоль

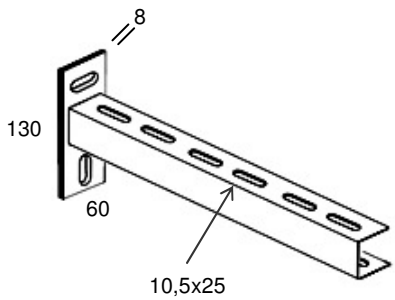

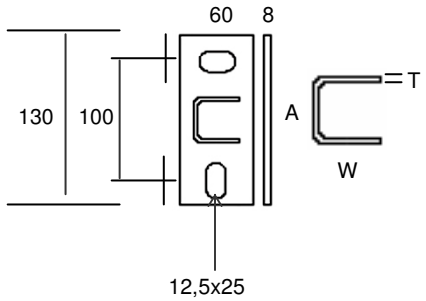

Part No	T	W	A	L	kg
GE-KDU-1	2	30	30	100	0,63
GE-KDU-2	2	30	30	200	0,76
GE-KDU-3	2	30	30	300	0,89
GE-KDU-4	2	30	30	400	1,00
GE-KDU-5	2	30	30	500	1,15
GE-KDU-6	2	30	30	600	1,28
GE-KDU-7	2	30	30	750	1,48
GE-KDU-8	2	30	30	900	1,67
GE-KDU-9	3	40	40	100	0,76
GE-KDU-10	3	40	40	200	1,00
GE-KDU-11	3	40	40	300	1,28
GE-KDU-12	3	40	40	400	1,54
GE-KDU-13	3	40	40	500	1,80
GE-KDU-14	3	40	40	600	2,00
GE-KDU-15	3	40	40	750	2,40
GE-KDU-16	3	40	40	900	2,85
GE-KDU-17	3	40	40	1200	3,60

HDG EG SS4 SS6 ESB APB

For HVAC installations

GE-KDL
L konsol
L bracket
Консоль

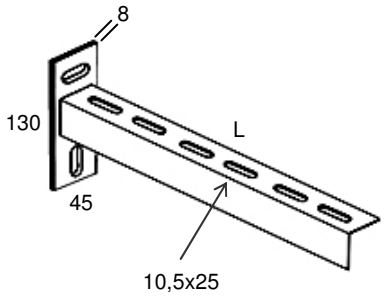

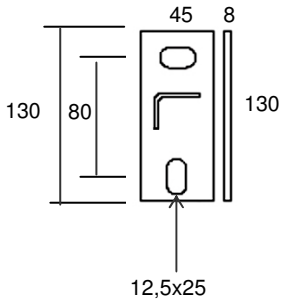

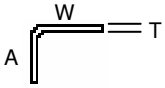

Part No	T	W	A	L	kg
GE-KDL-1	2	30	30	200	0,55
GE-KDL-2	2	30	30	300	0,65
GE-KDL-3	2	30	30	400	0,74
GE-KDL-4	2	30	30	500	0,82
GE-KDL-5	2	30	30	600	0,91
GE-KDL-6	3	40	40	100	0,55
GE-KDL-7	3	40	40	200	0,72
GE-KDL-8	3	40	40	300	0,90
GE-KDL-9	3	40	40	400	1,07
GE-KDL-10	3	40	40	500	1,25
GE-KDL-11	3	40	40	600	1,43
GE-KDL-12	3	40	40	750	1,70
GE-KDL-13	3	40	40	900	1,95
GE-KDL-14	3	40	40	1200	2,48

HDG EG SS4 SS6 ESB APB

For HVAC installations

Material options: Stainless steel AISI 304 (L) (A2) / AISI 316 (L) (A4), ST-37-42 Mild Steel, Corten A, Pregalvanized steel, Aluminum
Finish options : Hot Dip Galvanized to EN 1461, Electrogalvanized to TS 149, Electrostatic Paint Coated, Prime coated

GE-I
I profile
I profil
Профиль

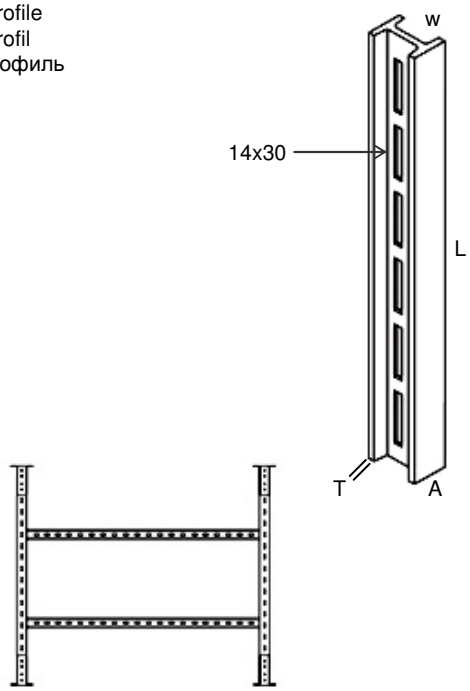

Part No	T	W	A	L	kg
GE-I-20	4	80	40	200	1,15
GE-I-30	4	80	40	300	1,70
GE-I-40	4	80	40	400	2,30
GE-I-50	4	80	40	500	2,85
GE-I-60	4	80	40	600	3,45
GE-I-70	4	80	40	700	4,00
GE-I-80	4	80	40	800	4,60
GE-I-90	4	80	40	900	5,15
GE-I-100	4	80	40	1000	5,70
GE-I-150	4	80	40	1500	8,55
GE-I-200	4	80	40	2000	11,45
GE-I-300	4	80	40	3000	17,10
GE-I-600	4	80	40	6000	34,20

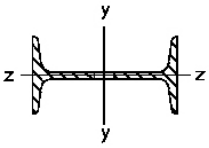

A_q cm^2	W_y cm^3	W_z cm^3
6.70	19,5	3,0

HDG EG SS4 SS6 ESB APB

GE-IP
I profile with head plate
Başlıklı I profil
Я профиль с главой plate

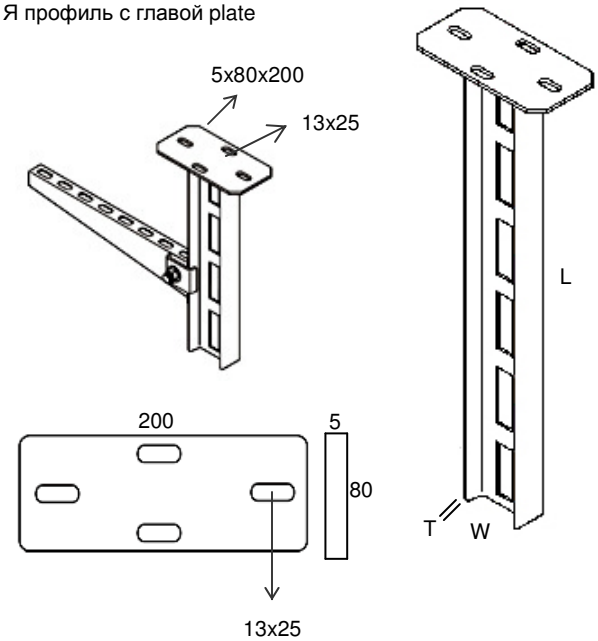

Part No	T	W	A	L	kg
GE-IP-20	4	80	40	200	1.75
GE-IP-30	4	80	40	300	2.30
GE-IP-40	4	80	40	400	2.90
GE-IP-50	4	80	40	500	3.45
GE-IP-60	4	80	40	600	4.05
GE-IP-70	4	80	40	700	4.60
GE-IP-80	4	80	40	800	5.20
GE-IP-90	4	80	40	900	5.75
GE-IP-100	4	80	40	1000	6.30
GE-IP-150	4	80	40	1500	9.15
GE-IP-200	4	80	40	2000	12.05
GE-IP-300	4	80	40	3000	17.70

HDG EG SS4 SS6 ESB APB

Material options: Stainless steel AISI 304 (L) (A2) / AISI 316 (L) (A4), ST-37-42 Mild Steel, Corten A, Pregalvanized steel, Aluminum
Finish options : Hot Dip Galvanized to EN 1461, Electrogalvanized to TS 149, Electrostatic Paint Coated, Prime coated

GE-CIK
Fence bracket
Çit konsolu
Кронштейн для провода ограждения

Part No	L
GE-CIK-20	200
GE-CIK-30	300
GE-CIK-40	400
GE-CIK-50	500
GE-CIK-60	600

HDG EG SS4 SS6 ESB APB

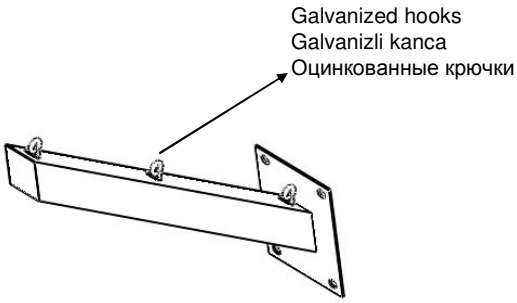

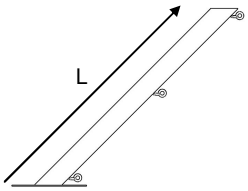

Custom production available upon request.
İsteğe göre diğer ölçülerde üretim yapılır.
Возможно изготовление продукции на заказ.

GE-KBT
Tubular bracket
Boru tipi konsol
Консоль

Part No	L
GE-KBT-20	200
GE-KBT-30	300
GE-KBT-40	400
GE-KBT-50	500
GE-KBT-60	600

HDG EG SS4 SS6 ESB APB

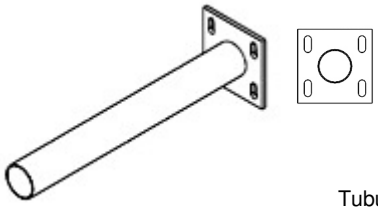

Tubular bracket with
welded base plate.

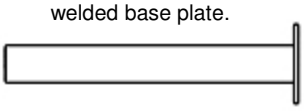

Custom production available upon request.
İsteğe göre diğer ölçülerde üretim yapılır.
Возможно изготовление продукции на заказ.

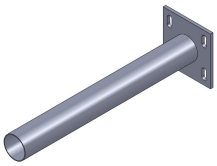

Material options: Stainless steel AISI 304 (L) (A2) / AISI 316 (L) (A4), ST-37-42 Mild Steel, Corten A, Pregalvanized steel, Aluminum
Finish options : Hot Dip Galvanized to EN 1461, Electrogalvanized to TS 149, Electrostatic Paint Coated, Prime coated

GE-IEK
I beam connector
I profil (NP) ek elemanı
Профиль разъем

Part No	T	W	A	L	kg
GE-IEK	3	65	17	220	0,52

HDG EG SS4 SS6 ESB APB

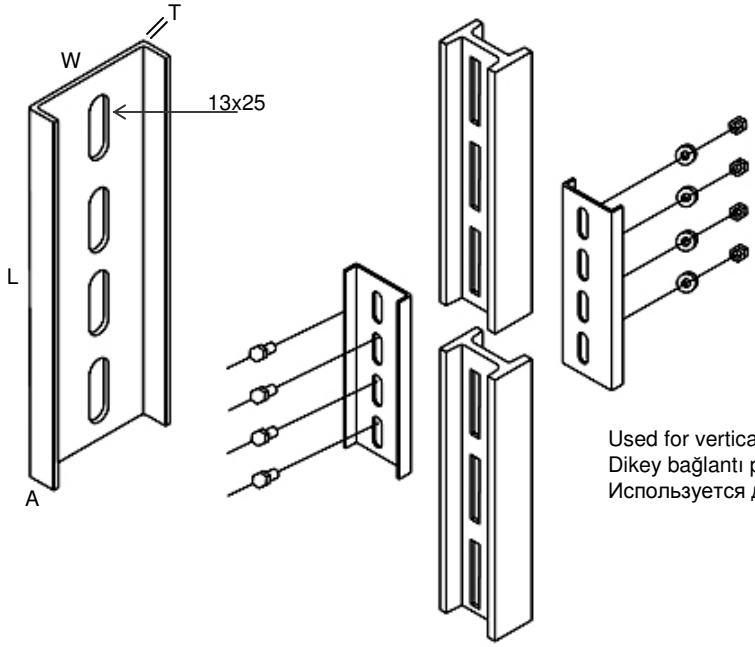

Used for vertical installations.
Dikey bağlantı parçasıdır.
Используется для вертикального соединения

GE-BMC
Beam connector
Birleştirme parçası
Профиль разъем

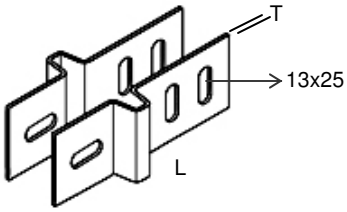

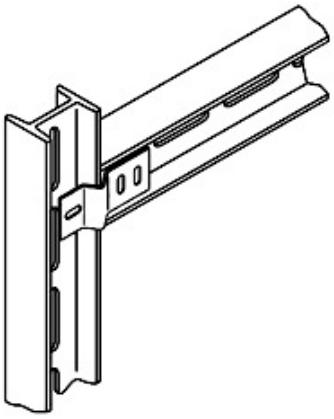

Part No	T	L	kg
GE-BMC-1	4	200	0,85

HDG EG SS4 SS6 ESB APB

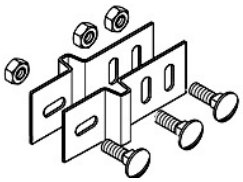

Used for horizontal installations.
Yatay bağlantı parçasıdır.
Используется для горизонтальной установки

Material options: Stainless steel AISI 304 (L) (A2) / AISI 316 (L) (A4), ST-37-42 Mild Steel, Corten A, Pregalvanized steel, Aluminum
Finish options : Hot Dip Galvanized to EN 1461, Electrogalvanized to TS 149, Electrostatic Paint Coated, Prime coated

GE-TT2
Ceiling bracket
Tavan tespit
Кронштейн для потолка

Part No	T	W	A	L	kg
GE-TT2	3	65	150	-	1,20

HDG EG SS4 SS6 ESB APB

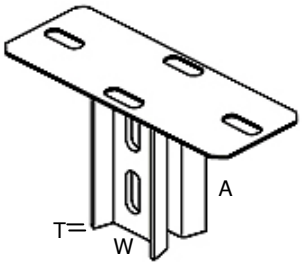

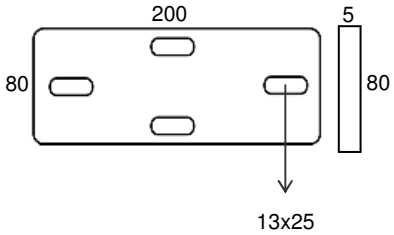

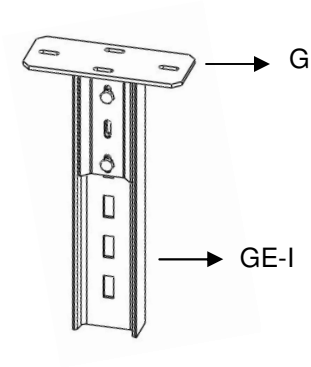

Straight assembly
Dik montaj
Угол свободных собраний

GE-TT4
Ceiling bracket
Tavan tespit
Кронштейн для потолка

Part No	T	W	A	L	kg
GE-TT4-1	3	100	100	-	0,82

HDG EG SS4 SS6 ESB APB

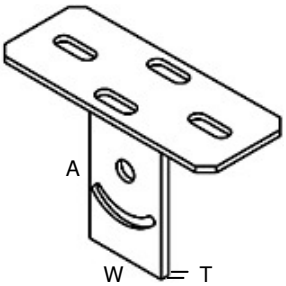

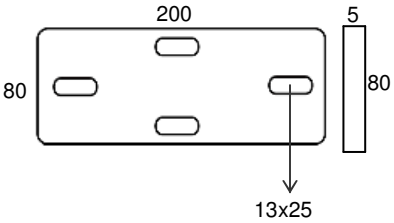

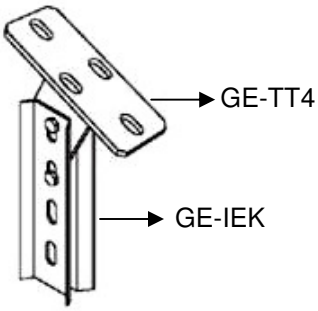

Angular assembly
Açılı montaj
Угловое собраний

GERPAAS®

EN Support systems
FR Supportage
D Tragsystemen
RU Поддержка систем
TR Destek sistemleri

Material options: Stainless steel AISI 304 (L) (A2) / AISI 316 (L) (A4), ST-37-42 Mild Steel, Corten A, Pregalvanized steel, Aluminum
Finish options : Hot Dip Galvanized to EN 1461, Electrogalvanized to TS 149, Electrostatic Paint Coated, Prime coated

GE-IK
I bracket
I konsolu
Консоль

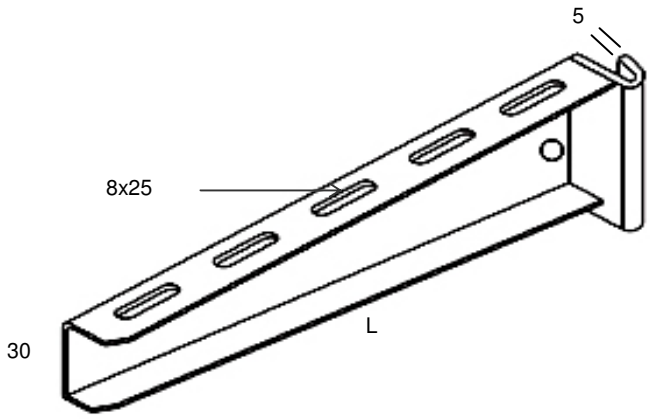

Part No	T	W	A1	A	L	kg
GE-IK-10	3	30	65	70	100	0,60
GE-IK-15	3	30	65	70	150	0,70
GE-IK-20	3	30	65	70	200	0,80
GE-IK-22	3	30	65	70	225	0,90
GE-IK-30	3	30	65	70	300	1,10
GE-IK-40	3	30	65	70	400	1,30
GE-IK-45	3	30	65	70	450	1,40
GE-IK-50	3	30	80	85	500	1,64
GE-IK-60	3	30	80	85	600	1,90
GE-IK-75	3	30	80	85	750	2,26
GE-IK-90	3	30	80	85	900	2,64

HDG EG SS4 SS6 ESB APB

I bracket supplied with fastening set.
I konsol sıkma parçasıyla birlikte teslim edilir.
Кронштейн крепления поставляются с аксессуарами.

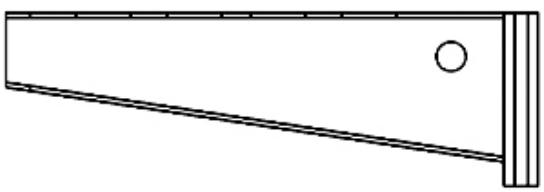

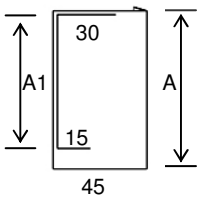

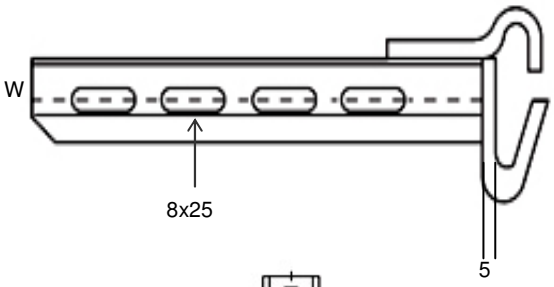

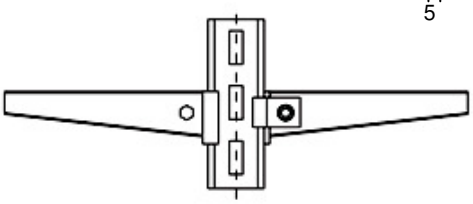

Used to secure I bracket to I beam.
I demirine I konsolunu monte etmek için kullanılır.
Используется для крепления кронштейна к профилю.

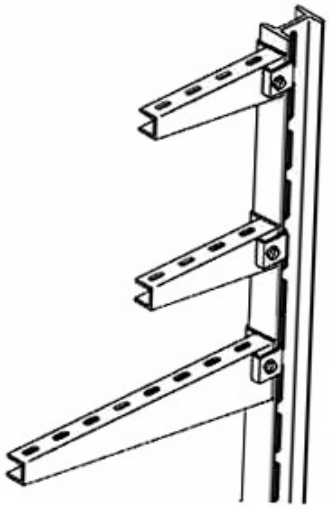

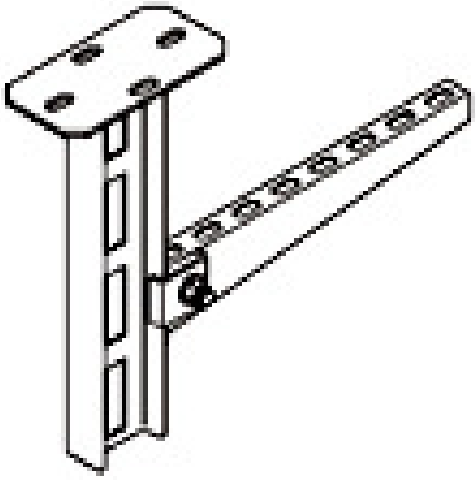

Material options: Stainless steel AISI 304 (L) (A2) / AISI 316 (L) (A4), ST-37-42 Mild Steel, Corten A, Pregalvanized steel, Aluminum
Finish options : Hot Dip Galvanized to EN 1461, Electrogalvanized to TS 149, Electrostatic Paint Coated, Prime coated

GE-ITP-A
Fixing clamp
Tespit kelepçesi
Фиксация зажим

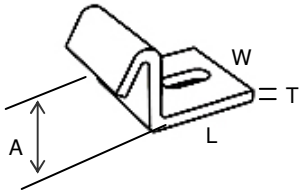

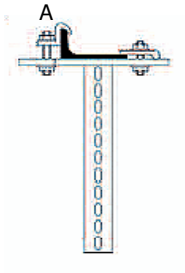

Part No	T	W	A	L	kg
GE-ITP-A	5	50	34	40	0.27

HDG EG SS4 SS6 ESB APB

GE-ITP-B
Fixing clamp
Tespit kelepçesi
Фиксация зажим

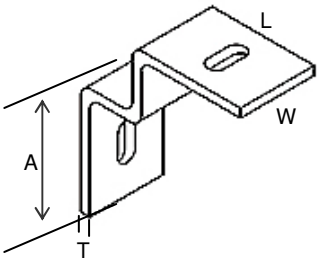

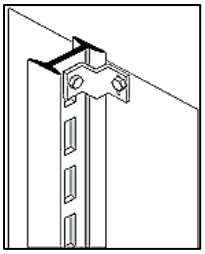

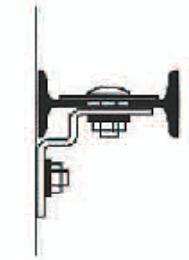

Part No	T	W	A	L	kg
GE-ITP-B	5	50	75	45	0.35

HDG EG SS4 SS6 ESB APB

GE-ITP-C
Fixing clamp
Tespit kelepçesi
Фиксация зажим

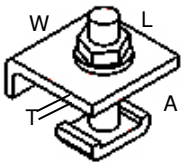

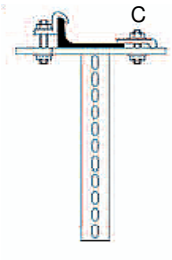

Part No	T	W	A	L	kg
GE-ITP-C-1	6	50	5	60	0.16
GE-ITP-C-2	6	50	10	60	0.21
GE-ITP-C-3	6	50	15	60	0.22
GE-ITP-C-4	6	50	20	60	0.25
GE-ITP-C-5	6	50	25	60	0.27

HDG EG SS4 SS6 ESB APB

Material options: Stainless steel AISI 304 (L) (A2) / AISI 316 (L) (A4), ST-37-42 Mild Steel, Corten A, Pregalvanized steel, Aluminum
Finish options : Hot Dip Galvanized to EN 1461, Electrogalvanized to TS 149, Electrostatic Paint Coated, Prime coated

GE-ITP L
L fixing clamp
L tespit elemanı
L фиксация зажим

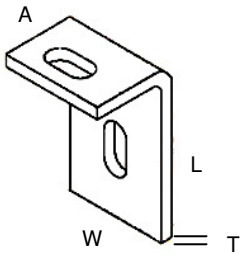

Part No	T	W	A	L	kg
GE-ITP L	5	45	35	70	0,17

HDG EG SS4 SS6 ESB APB

GE-CSC
Beam clamp
Mengene
Пучок зажим

Part No	W	A	Ø	kg
GE-CSC-8	25	42	M8	0.18
GE-CSC-10	25	42	M10	0.18
GE-CSC-12	25	42	M12	0.18
GE-CSC-14	25	42	M14	0.18
GE-CSC-16	25	42	M16	0.18

HDG EG SS4 SS6 ESB APB

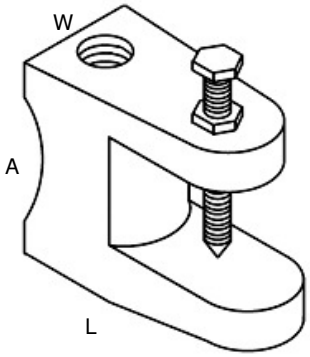

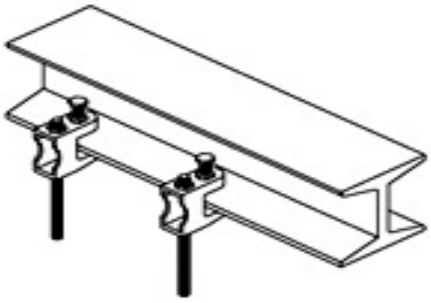

GE-CSCF
Safety strap
Emniyet bandı
Ремешок для армирования

Part No	T	W	L	Ø
GE-CSCF-8	3	25	350	M8
GE-CSCF-10	3	25	350	M10
GE-CSCF-12	3	25	350	M12
GE-CSCF-14	3	40	400	M14
GE-CSCF-16	3	40	400	M16

HDG PG EG SS4 SS6 ESB APB

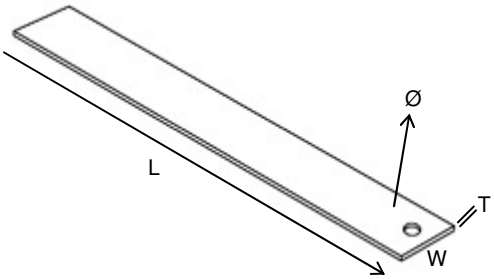

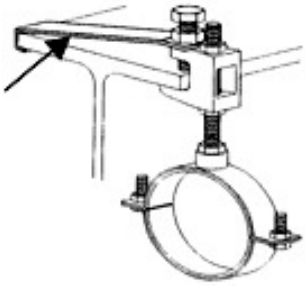

Beam clamps can be secured with GE-CSCF safety straps.
Beam clamps must be secured for installation of pipes larger than DN 65 to avoid slipping according to VdS-regulations.

Material options: Stainless steel AISI 304 (L) (A2) / AISI 316 (L) (A4), ST-37-42 Mild Steel, Corten A, Pregalvanized steel, Aluminum
Finish options : Hot Dip Galvanized to EN 1461, Electrogalvanized to TS 149, Electrostatic Paint Coated, Prime coated

GE-T
T profile
T profil
Профиль

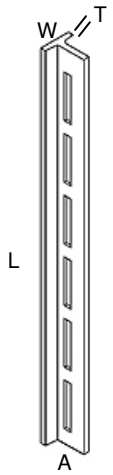

Part No	T	W	A	L	kg
GE-T-20	4	40	40	200	0,46
GE-T-30	4	40	40	300	0,70
GE-T-40	4	40	40	400	0,95
GE-T-50	4	40	40	500	1,15
GE-T-60	4	40	40	600	1,40
GE-T-70	4	40	40	700	1,65
GE-T-80	4	40	40	800	1,85
GE-T-90	4	40	40	900	2,10
GE-T-100	4	40	40	1000	2,30
GE-T-150	4	40	40	1500	3,45
GE-T-200	4	40	40	2000	4,60
GE-T-300	4	40	40	3000	6,90
GE-T-600	4	40	40	6000	13,80

HDG EG SS4 SS6 ESB APB

GE-TP
T profile with head plate
Başlıklı T profil
Кронштейн для потолка

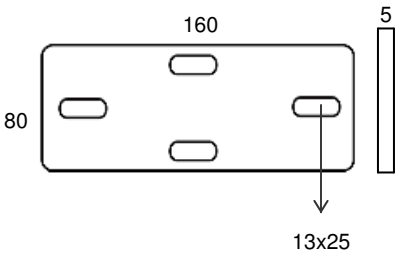

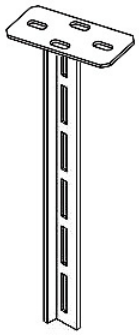

Part No	T	W	A	L	kg
GE-TP-20	4	40	40	200	0.97
GE-TP-30	4	40	40	300	1,21
GE-TP-40	4	40	40	400	1.46
GE-TP-50	4	40	40	500	1.66
GE-TP-60	4	40	40	600	1.91
GE-TP-70	4	40	40	700	2.16
GE-TP-80	4	40	40	400	2.36
GE-TP-90	4	40	40	900	2.61
GE-TP-100	4	40	40	1000	2.81
GE-TP-150	4	40	40	1500	3,96
GE-TP-200	4	40	40	2000	5,10
GE-TP-300	4	40	40	3000	7.41

HDG EG SS4 SS6 ESB APB

GE-TEK
T channel connector
T profil ek elemanı

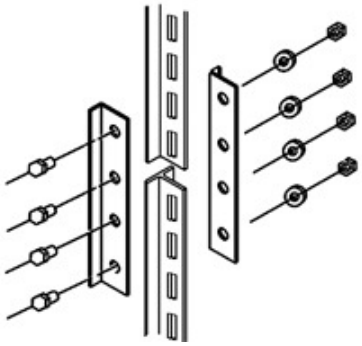

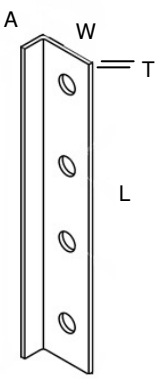

Part No	T	W	A	L	kg
GE-TEK	3	34	15	220	0,26

HDG EG SS4 SS6 ESB APB

Material options: Stainless steel AISI 304 (L) (A2) / AISI 316 (L) (A4), ST-37-42 Mild Steel, Corten A, Pregalvanized steel, Aluminum
Finish options : Hot Dip Galvanized to EN 1461, Electrogalvanized to TS 149, Electrostatic Paint Coated, Prime coated

GE-TT1
Ceiling bracket
Tavan tespit
Кронштейн для потолка

Part No	T	W	A	L	kg
GE-TT1	3	34	150	-	0,83

HDG EG SS4 SS6 ESB APB

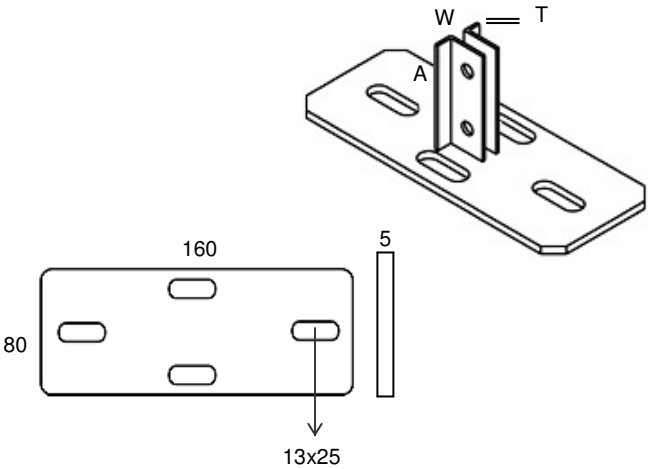

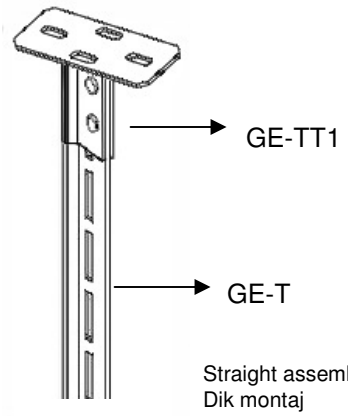

Straight assembly
Dik montaj
Угол свободных собраний

GE-TT3
Ceiling bracket
Tavan tespit
Кронштейн для потолка

Part No	T	W	A	L	kg
GE-TT3	4	60	50	-	0,60

HDG EG SS4 SS6 ESB APB

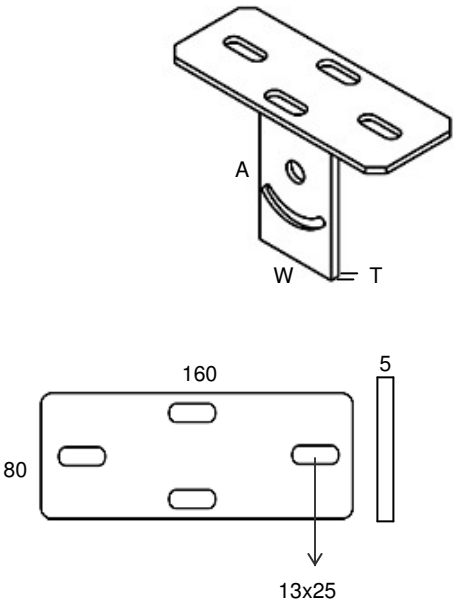

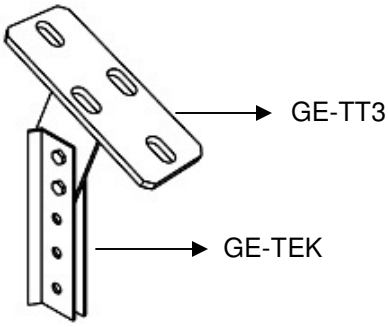

Angular assembly
Açılı montaj
Угловое собраний

Material options: Stainless steel AISI 304 (L) (A2) / AISI 316 (L) (A4), ST-37-42 Mild Steel, Corten A, Pregalvanized steel, Aluminum
Finish options : Hot Dip Galvanized to EN 1461, Electrogalvanized to TS 149, Electrostatic Paint Coated, Prime coated

GE-NPU
U channel
U profil
Профиль

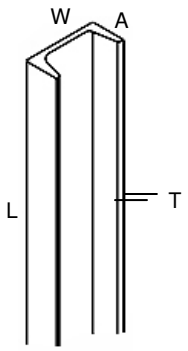

Part No	T	W	A	L	Kg/ad
GE-NPU-1	6	65	42	1000	7,50
GE-NPU-2	6	65	42	2000	15,00
GE-NPU-3	6	65	42	3000	22,50
GE-NPU-4	6	65	42	6000	45,00

HDG EG SS4 SS6 ESB APB

GE-NPUD
U channel perforated
U profil delikli
Профиль

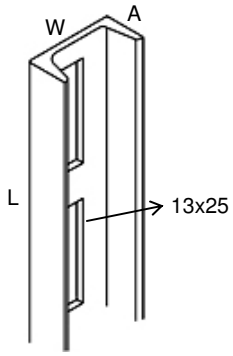

Part No	T	W	A	L	Kg/ad
GE-NPUD-1	6	65	42	1000	7,25
GE-NPUD-2	6	65	42	2000	14,50
GE-NPUD-3	6	65	42	3000	21,75
GE-NPUD-4	6	65	42	6000	43,50

HDG EG SS4 SS6 ESB APB

GE-NPLA
L channel
L profil
Профиль

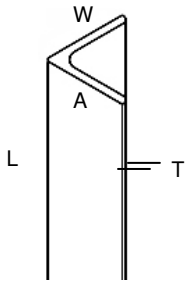

Part No	T	W	A	L	Kg/ad
GE-NPLA-1	4	40	40	1000	2,50
GE-NPLA-2	4	40	40	2000	5,00
GE-NPLA-3	4	40	40	3000	7,50
GE-NPLA-4	4	40	40	6000	15,00
GE-NPLA-5	5	50	50	1000	3,75
GE-NPLA-6	5	50	50	2000	7,50
GE-NPLA-7	5	50	50	3000	11,25
GE-NPLA-8	5	50	50	6000	22,50

HDG EG SS4 SS6 ESB APB

GE-NPLAD
L channel perforated
L profil delikli
Профиль

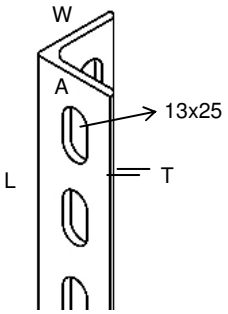

Part No	T	W	A	L	Kg/ad
GE-NPLAD-1	4	40	40	1000	2,40
GE-NPLAD-2	4	40	40	2000	4,80
GE-NPLAD-3	4	40	40	3000	7,20
GE-NPLAD-4	4	40	40	6000	14,40
GE-NPLAD-5	5	50	50	1000	3,60
GE-NPLAD-6	5	50	50	2000	7,20
GE-NPLAD-7	5	50	50	3000	10,80
GE-NPLAD-8	5	50	50	6000	21,60

HDG EG SS4 SS6 ESB APB

Material options: Stainless steel AISI 304 (L) (A2) / AISI 316 (L) (A4), ST-37-42 Mild Steel, Corten A, Pregalvanized steel, Aluminum
Finish options : Hot Dip Galvanized to EN 1461, Electrogalvanized to TS 149, Electrostatic Paint Coated, Prime coated

GE-U
U channel
U profil
Профиль

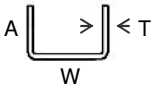

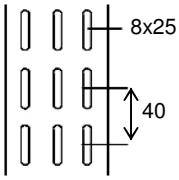

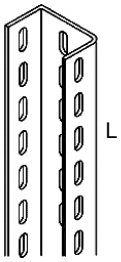

Part No	T	W	A	L	Kg/ad
GE-U-1	2	48	30	500	0,80
GE-U-2	2	48	30	1000	1,60
GE-U-3	2	48	30	1500	2,40
GE-U-4	2	48	30	2000	3,20
GE-U-5	2	48	30	3000	4,80
GE-U-6	2	56	40	500	1,00
GE-U-7	2	56	40	1000	2,00
GE-U-8	2	56	40	2000	4,00
GE-U-9	2	56	40	3000	6,00
GE-U-10	2	40	40	1000	1,80
GE-U-11	2	50	50	1000	2,27
GE-U-12	3	50	40	1000	2.83
GE-U-13	4	50	40	1000	3.65
GE-U-14	5	50	40	1000	4.40

HDG PG EG SS4 SS6 ESB APB

GE-UV
U channel
U profil
Профиль

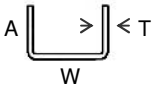

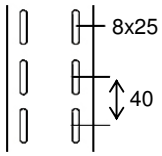

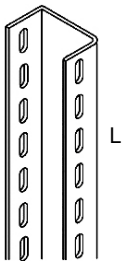

Part No	T	W	A	L	kg/m
GE-UV-1	3	30	30	2000	1,77
GE-UV-2	3	40	40	2000	2,33
GE-UV-3	4	40	40	2000	2,95
GE-UV-4	4	50	50	2000	3,85

HDG PG EG SS4 SS6 ESB APB

GE-UY
U channel
U profil
Профиль

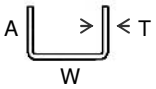

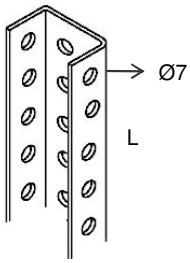

Part No	T	W	A	L	kg/m
GE-UY-1	2	40	40	3000	1,79
GE-UY-2	2	48	30	3000	1,60
GE-UY-3	2	56	40	3000	2,00
GE-UY-4	2	50	40	3000	2,44
GE-UY-5	3	35	35	3000	2,23
GE-UY-6	3	40	40	3000	2,59
GE-UY-7	3	50	40	3000	2,80
GE-UY-8	4	40	40	3000	3,33
GE-UY-9	5	50	50	3000	5,20

HDG PG EG SS4 SS6 ESB APB

GERPAAS®

EN Support systems
FR Supportage
D Tragsystemen
RU Поддержка систем
TR Destek sistemleri

Material options: Stainless steel AISI 304 (L) (A2) / AISI 316 (L) (A4), ST-37-42 Mild Steel, Corten A, Pregalvanized steel, Aluminum
Finish options : Hot Dip Galvanized to EN 1461, Electrogalvanized to TS 149, Electrostatic Paint Coated, Prime coated

GE-LS
L channel
L profil
Профиль

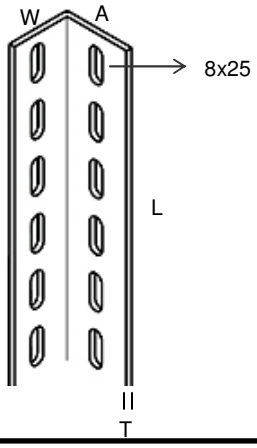

Part No	T	W	A	L	kg/m
GE-LS-1	2	30	30	2400	0,90
GE-LS-2	2	40	40	3000	1,20
GE-LS-3	3	30	30	3000	1,30
GE-LS-4	3	40	40	3000	1,80
GE-LS-5	4	30	30	3000	1,66
GE-LS-6	4	40	40	3000	2,30
GE-LS-7	3	50	50	2000	2,15

HDG PG EG SS4 SS6 ESB APB

GE-LD
L channel
L profil
Профиль

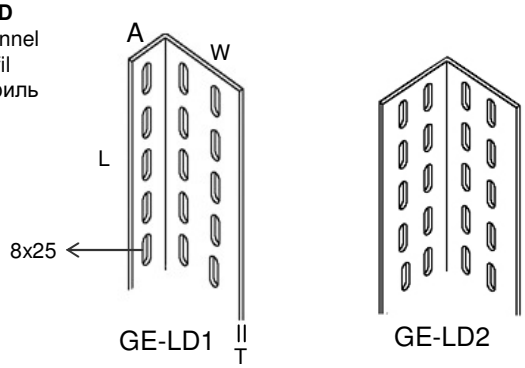

Part No	T	W	A	L	kg/m
GE-LD1-1	2	40	20	3000	0,90
GE-LD1-2	2,5	90	20	3000	2,10
GE-LD1-3	2,5	110	20	3000	2,50
GE-LD1-4	3	40	20	3000	1,30
GE-LD1-5	3	90	20	3000	2,50
GE-LD1-6	3	110	20	3000	2,98
GE-LD1-7	4	40	20	3000	1,66
GE-LD2-1	2	40	40	3000	1,20
GE-LD2-2	3	40	40	3000	1,78
GE-LD2-3	4	40	40	3000	2,30

HDG PG EG SS4 SS6 ESB APB

GE-LY
L channel
L profil
Профиль

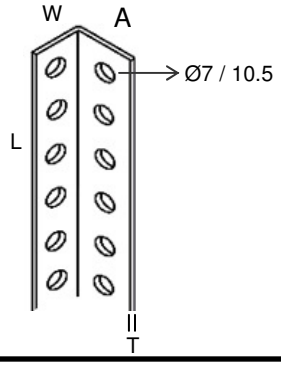

Part No	T	W	A	L	kg/m
GE-LY-1	2	30	30	3000	0,86
GE-LY-2	2	40	40	3000	1,20
GE-LY-3	2,5	40	40	3000	1,50
GE-LY-4	3	30	30	3000	1,30
GE-LY-5	3	40	40	3000	1,78
GE-LY-6	4	30	30	3000	1,66
GE-LY-7	4	40	40	3000	2,30

HDG PG EG SS4 SS6 ESB APB

GE-LK
L channel
L profil
Профиль

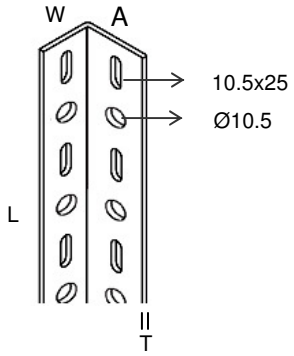

Part No	T	W	A	L	kg/m
GE-LK-1	2	30	30	3000	0,90
GE-LK-2	2	40	40	3000	1,20
GE-LK-3	2,5	30	30	3000	1,30
GE-LK-4	2,5	40	40	3000	1,50
GE-LK-5	3	30	30	3000	1,30
GE-LK-6	3	40	40	3000	1,78
GE-LK-7	4	40	40	3000	2,30
GE-LK-8	4	50	50	3000	2,95

HDG PG EG SS4 SS6 ESB APB

Material options: Stainless steel AISI 304 (L) (A2) / AISI 316 (L) (A4), ST-37-42 Mild Steel, Corten A, Pregalvanized steel, Aluminum
Finish options : Hot Dip Galvanized to EN 1461, Electrogalvanized to TS 149, Electrostatic Paint Coated, Prime coated

GE-Z
Z profile
Z profil
Профиль

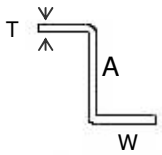

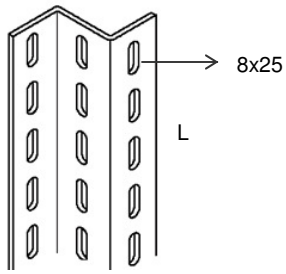

Part No	T	W	A	L	kg/m
GE-Z-1	2	20	30	3000	1,00
GE-Z-2	2	20	40	3000	1,15
GE-Z-3	2	30	40	3000	1,45
GE-Z-4	3	25	40	3000	1,90
GE-Z-5	4	25	40	3000	2,40

HDG PG EG SS4 SS6 ESB APB

GE-Z
Z profile
Z profil
Профиль

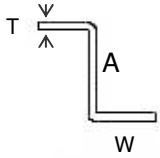

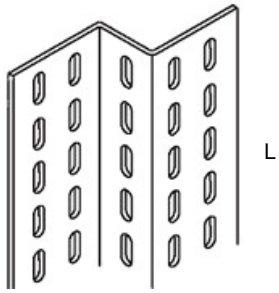

Part No	T	W	A	L	kg/m
GE-Z-6	2	40	30	3000	1,65
GE-Z-7	2	40	40	3000	1,80
GE-Z-8	3	40	40	3000	2,60
GE-Z-9	4	40	40	3000	3,35

HDG PG EG SS4 SS6 ESB APB

GE-Z
Z profile
Z profil
Профиль

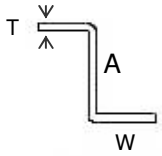

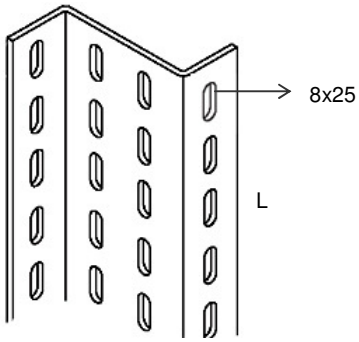

Part No	T	W	A	L	kg/m
GE-Z-10	2	20	40	3000	1,15
GE-Z-11	2	20	60	3000	1,50
GE-Z-12	3	25	40	3000	1,90
GE-Z-13	3	25	60	3000	2,35
GE-Z-14	4	25	40	3000	2,40
GE-Z-15	4	25	60	3000	3,00

HDG PG EG SS4 SS6 ESB APB

GE-Z
Z profile
Z profil
Профиль

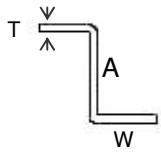

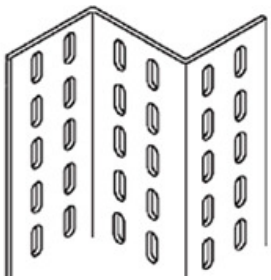

Part No	T	W	A	L	kg/m
GE-Z-16	2	40	40	3000	1,90
GE-Z-17	2	40	60	3000	2,25
GE-Z-18	3	40	40	3000	2,90
GE-Z-19	3	40	60	3000	3,40
GE-Z-20	4	40	40	3000	3,85
GE-Z-21	4	40	60	3000	4,50

HDG PG EG SS4 SS6 ESB APB

Material options: Stainless steel AISI 304 (L) (A2) / AISI 316 (L) (A4), ST-37-42 Mild Steel, Corten A, Pregalvanized steel, Aluminum
Finish options : Hot Dip Galvanized to EN 1461, Electrogalvanized to TS 149, Electrostatic Paint Coated, Prime coated

GE-SL
Perforated flat bar
Delikli düz lama
Плоский профиль

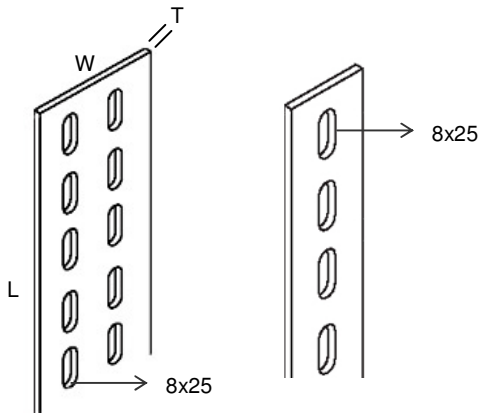

Part No	T	W	L	kg/m
GE-SL-1	2	25	3000	0,40
GE-SL-2	2	40	3000	0,65
GE-SL-3	2	60	3000	0,95
GE-SL-4	3	40	3000	0,95
GE-SL-5	3	60	3000	1,45
GE-SL-6	4	40	3000	1,30
GE-SL-7	4	60	3000	1,90

HDG PG EG SS4 SS6 ESB APB

GE-OM
Omega profile
Omega profil
Профиль

Part No	T	W	A	A_1	L	kg/m
GE-OM-01	2	30	20	20	3000	1,50
GE-OM-02	2	40	30	20	3000	2,00
GE-OM-03	2	40	40	25	3000	2,47
GE-OM-04	3	40	40	25	3000	3,50
GE-OM-05	4	40	40	25	3000	4,40

HDG PG EG SS4 SS6 ESB APB

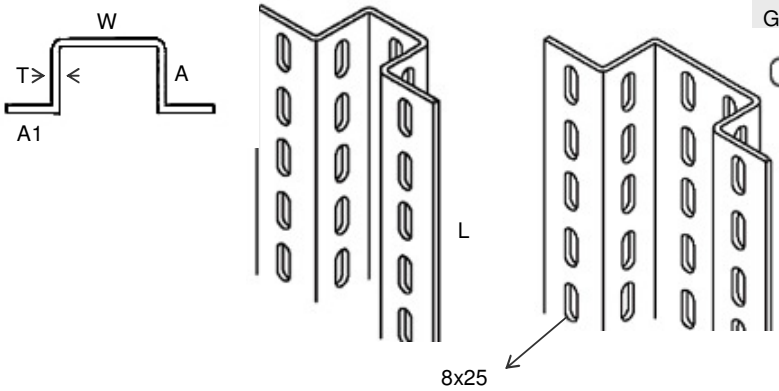

GERPAAS®

EN Support systems
FR Supportage
D Tragsystemen
RU Поддержка систем
TR Destek sistemleri

Material options: Stainless steel AISI 304 (L) (A2) / AISI 316 (L) (A4), ST-37-42 Mild Steel, Corten A, Pregalvanized steel, Aluminum
Finish options : Hot Dip Galvanized to EN 1461, Electrogalvanized to TS 149, Electrostatic Paint Coated, Prime coated

GE-AS1
Ceiling brackets
Askı elemanları
Потолочная консоль

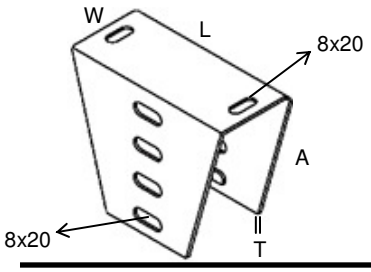

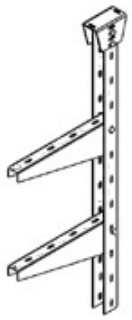

Part No	T	W	A	L	kg
GE-AS1-1	2	52	80	120	0.36
GE-AS1-2	2	60	100	120	0,44
GE-AS1-3	3	60	100	120	0,66

HDG PG EG SS4 SS6 ESB APB

GE-AS2
Ceiling brackets
Askı elemanları
Потолочная консоль

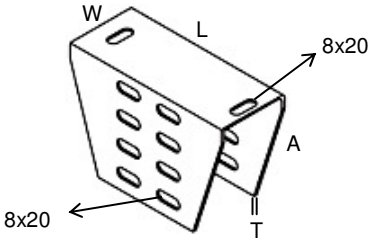

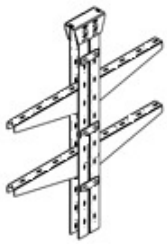

Part No	T	W	A	L	kg
GE-AS2-1	2	52	80	160	0.42
GE-AS2-2	2	60	100	140	0,51
GE-AS2-3	3	60	100	140	0,77

HDG PG EG SS4 SS6 ESB APB

GE-AS3
Ceiling brackets
Askı elemanları
Потолочная консоль

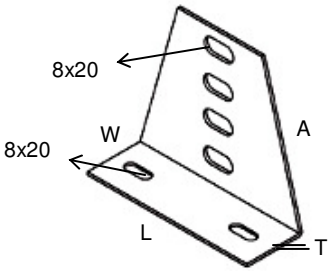

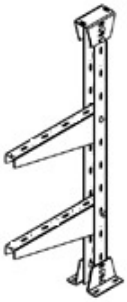

Part No	T	W	A	L	kg
GE-AS3-1	2	35	80	120	0,20
GE-AS3-2	2	35	100	120	0,26
GE-AS3-3	2	35	100	140	0,30
GE-AS3-4	3	35	100	140	0,45

HDG PG EG SS4 SS6 ESB APB

GE-AS3-D
Ceiling brackets
Askı elemanları
Потолочная консоль

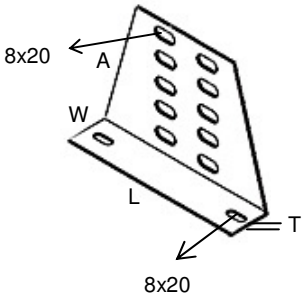

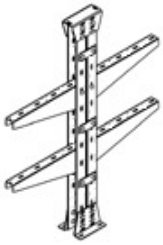

Part No	T	W	A	L	kg
GE-AS3-D1	2	35	100	140	0,30
GE-AS3-D2	3	35	100	140	0,45

HDG PG EG SS4 SS6 ESB APB

Material options: Stainless steel AISI 304 (L) (A2) / AISI 316 (L) (A4), ST-37-42 Mild Steel, Corten A, Pregalvanized steel, Aluminum
Finish options : Hot Dip Galvanized to EN 1461, Electrogalvanized to TS 149, Electrostatic Paint Coated, Prime coated

GE-AS4
Channel connector
Profil birleştirme parçası
Профиль разъем

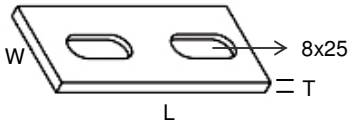

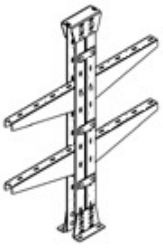

Part No	T	W	L	kg
GE-AS4-1	2	35	60	0,034
GE-AS4-2	2	35	80	0,045
GE-AS4-3	3	35	80	0,067

HDG PG EG SS4 SS6 ESB APB

GE-TA1
Ceiling bracket
Tavan askı
Потолочная консоль

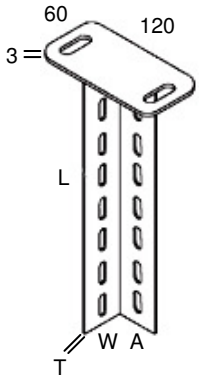

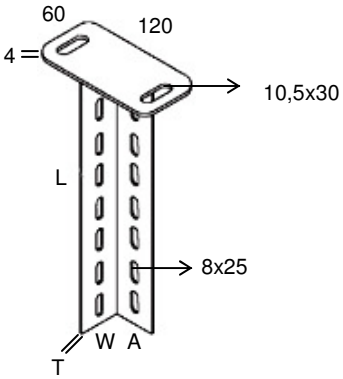

Part	T	W	A	L	kg
GE-TA1-1	2	40	40	500	0,78
GE-TA1-2	2	40	40	600	0,90
GE-TA1-3	2	40	40	750	1,10
GE-TA1-4	2	40	40	1000	1,39
GE-TA1-5	3	40	40	500	1,10
GE-TA1-6	3	40	40	600	1,30
GE-TA1-7	3	40	40	750	1,56
GE-TA1-8	3	40	40	1000	2,00

HDG EG SS4 SS6 ESB APB

GE-TA4
Ceiling bracket
Tavan askı
Потолочная консоль

Part	T	W	A	L	kg
GE-TA4-1	2	37	37	120	0,31
GE-TA4-2	3	37	37	120	0.45

HDG EG SS4 SS6 ESB APB

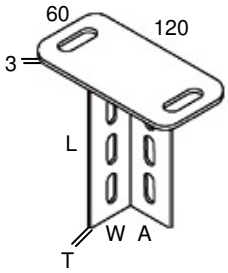

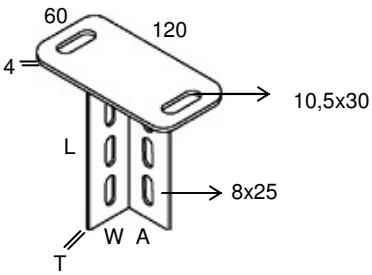

Material options: Stainless steel AISI 304 (L) (A2) / AISI 316 (L) (A4), ST-37-42 Mild Steel, Corten A, Pregalvanized steel, Aluminum
Finish options : Hot Dip Galvanized to EN 1461, Electrogalvanized to TS 149, Electrostatic Paint Coated, Prime coated

GE-TA2
Ceiling brackets
Tavan askı
Потолочная консоль

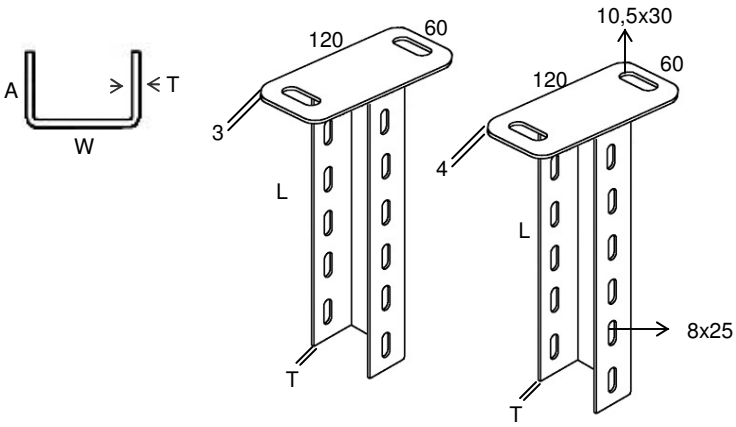

Part	T	W	A	L	kg
GE-TA2-1	2	48	30	500	1,00
GE-TA2-2	2	48	30	600	1,20
GE-TA2-3	2	48	30	750	1.50
GE-TA2-4	2	56	40	500	1,00
GE-TA2-5	2	56	40	600	1,35
GE-TA2-6	2	56	40	750	1,65
GE-TA2-7	3	56	40	500	1,60
GE-TA2-8	3	56	40	600	1,90
GE-TA2-9	3	56	40	750	2,35

HDG EG SS4 SS6 ESB APB

GE-TA3S
Ceiling brackets
Tavan askı
Потолочная консоль

Part	T	W	A	L	kg
GE-TA3S-1	2	42	26	120	0,32
GE-TA3S-2	2	50	36	120	0.35
GE-TA3S-3	3	50	36	120	0.50

HDG EG SS4 SS6 ESB APB

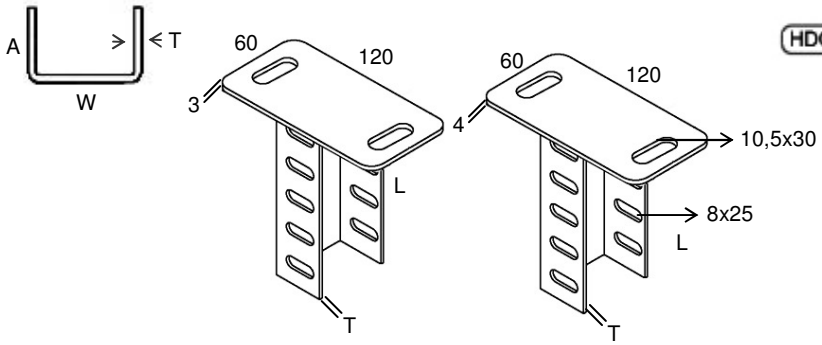

GE-TA3D
Ceiling brackets
Tavan askı
Потолочная консоль

Part	T	W	A	L	kg
GE-TA3D-1	2	42	52	120	0,53
GE-TA3D-2	2	50	72	120	0,62
GE-TA3D-3	3	50	72	120	0,82

HDG EG SS4 SS6 ESB APB

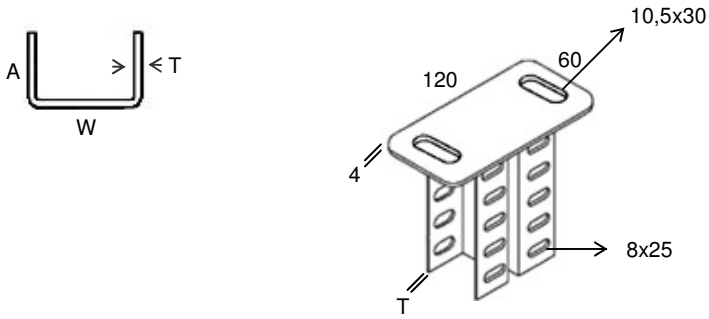

Material options: Stainless steel AISI 304 (L) (A2) / AISI 316 (L) (A4), ST-37-42 Mild Steel, Corten A, Pregalvanized steel, Aluminum
Finish options : Hot Dip Galvanized to EN 1461, Electrogalvanized to TS 149, Electrostatic Paint Coated, Prime coated

GE-AE-5L
Tray suspension with rod, L
Tijle kanal taşıyıcı L
Поддержка для осуществления кабельного лотка

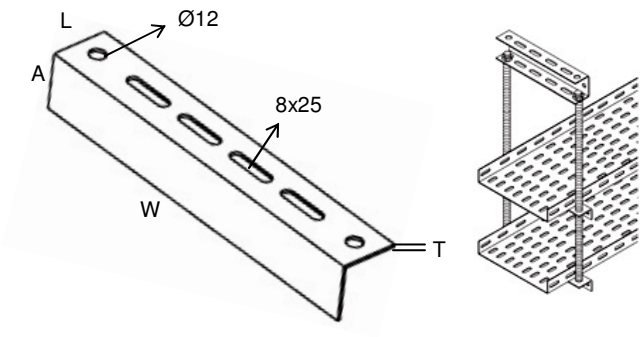

Part No	T	W	A	L	kg
GE-AE-5L-16	1,5	220	40	40	0,20
GE-AE-5L-20	1,5	260	40	40	0,25
GE-AE-5L-26	1,5	320	40	40	0,40
GE-AE-5L-30	2,0	360	50	50	0,57
GE-AE-5L-40	2,5	460	50	50	0,90
GE-AE-5L-45	2,5	510	50	50	1,00
GE-AE-5L-50	2,5	560	50	50	1,10
GE-AE-5L-60	3,0	660	50	50	1,58

HDG PG EG SS4 SS6 ESB APB

GE-AE-5U
Tray suspension with rod, U
Tijle kanal taşıyıcı U
Поддержка для осуществления кабельного лотка

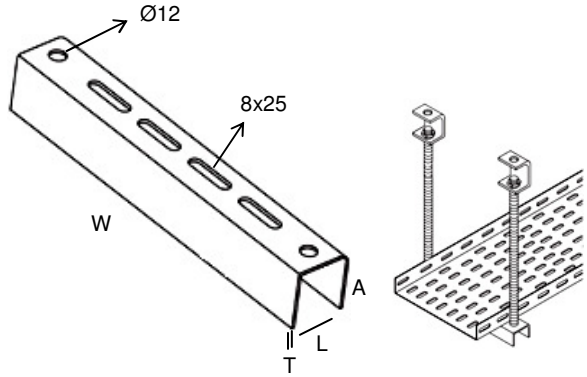

Part No	T	W	A	L	kg
GE-AE-5U-10	2,0	160	30	30	0,22
GE-AE-5U-16	2,0	220	30	30	0,30
GE-AE-5U-20	2,0	260	30	30	0,35
GE-AE-5U-26	2,0	320	30	30	0,43
GE-AE-5U-30	2,0	360	30	30	0,48
GE-AE-5U-40	2,5	460	35	35	0,88
GE-AE-5U-45	2,5	510	35	35	0,97
GE-AE-5U-50	2,5	560	35	35	1,06
GE-AE-5U-60	3,0	660	40	40	1,70

HDG PG EG SS4 SS6 ESB APB

GE-AE-5C
Tray suspension with rod, C
Tijle kanal taşıyıcı C
Поддержка для осуществления кабельного лотка

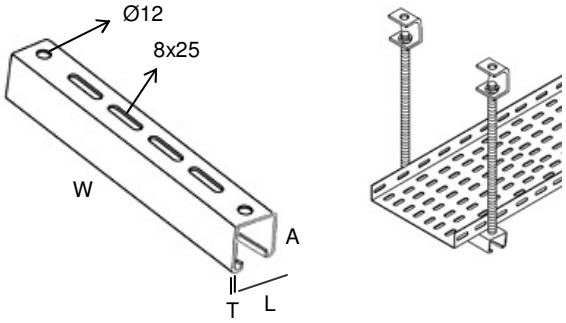

Part No	T	W	A	L	kg
GE-AE-5C-10	2,0	160	41	41	0,32
GE-AE-5C-16	2,0	220	41	41	0,44
GE-AE-5C-20	2,0	260	41	41	0,52
GE-AE-5C-26	2,0	320	41	41	0,64
GE-AE-5C-30	2,0	360	41	41	0,72
GE-AE-5C-40	2,0	460	41	41	0,92
GE-AE-5C-45	2,0	510	41	41	1,00
GE-AE-5C-50	2,0	560	41	41	1,12
GE-AE-5C-60	2,0	660	41	41	1,32

HDG PG EG SS4 SS6 ESB APB

Material options: Stainless steel AISI 304 (L) (A2) / AISI 316 (L) (A4), ST-37-42 Mild Steel, Corten A, Pregalvanized steel, Aluminum
Finish options : Hot Dip Galvanized to EN 1461, Electrogalvanized to TS 149, Electrostatic Paint Coated, Prime coated

GE-AE-1
Tij tipi kavrama
Tray suspension clamp
Поддержка для осуществления кабельного лотка

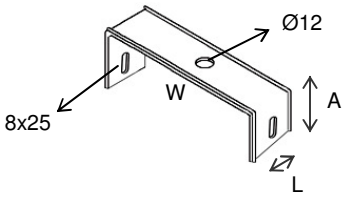

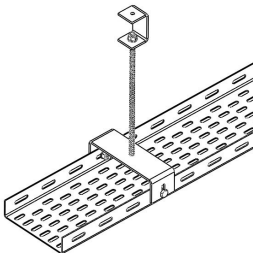

Part No	T	W	A	L	kg
GE-AE-1-5	1,5	54	50	50	0,10
GE-AE-1-7	1,5	74	50	50	0,12
GE-AE-1-10	1,5	104	50	50	0,14
GE-AE-1-16	1,5	164	60	60	0,20
GE-AE-1-20	1,5	204	60	60	0,23
GE-AE-1-26	2,0	264	60	60	0,37
GE-AE-1-30	2,0	304	60	60	0,40

HDG PG EG SS4 SS6 ESB APB

GE-AE-2
Ceiling fixing unit
Tij tipi tavan tespit
Потолочная консоль

Part No	T	W	A	L	kg
GE-AE-2-1	3,0	40	60	40	0,13

HDG PG EG SS4 SS6 ESB APB

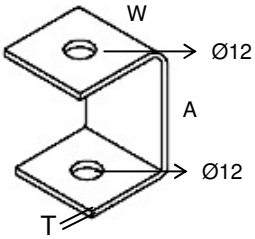

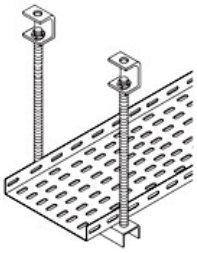

GE-AET
Ceiling bracket for rod
Tij için tavan konsolu
Потолочная консоль

Part No	T	W	A	L	kg
GE-AET-1	3,0	40	13	60	0,07

HDG EG SS4 SS6 ESB APB

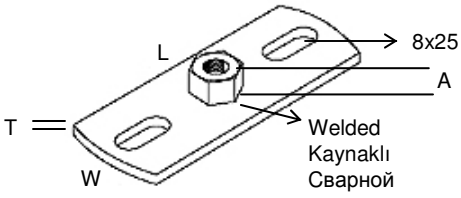

Material options: Stainless steel AISI 304 (L) (A2) / AISI 316 (L) (A4), ST-37-42 Mild Steel, Corten A, Pregalvanized steel, Aluminum
Finish options : Hot Dip Galvanized to EN 1461, Electrogalvanized to TS 149, Electrostatic Paint Coated, Prime coated

GE-KAT
Tij
Thread rod
Гихон

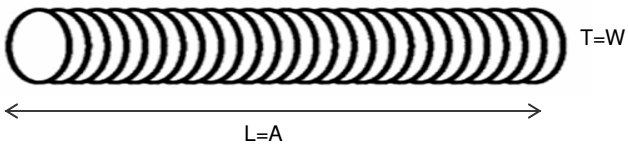

Part No	T	W	A	L	kg
GE-KAT 01	8	8	200	200	0,06
GE-KAT 02	8	8	500	500	0,15
GE-KAT 03	8	8	1000	1000	0,30
GE-KAT-04	8	8	2000	2000	0,60
GE-KAT 05	10	10	1000	1000	0,48
GE-KAT-06	10	10	3000	3000	1,45
GE-KAT 07	12	12	1000	1000	0,70
GE-KAT-08	12	12	3000	3000	2,10
GE-KAT-09	14	14	1000	1000	0,90
GE-KAT-10	14	14	3000	3000	2,70

EG SS4 SS6

GE-CCD
Kovanlı çelik dübel
Shell bolt
Монтажные болты (дюбели)

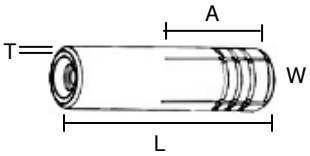

Part No	T	W	A	L	Max. Perm. load (kN)	Bending Moment	kg
GE-CCD 01	2,5	8	30	50	1,8	6	0,113
GE-CCD 02	2,5	10	30	50	3,5	12	0,125
GE-CCD 03	3,0	12	30	50	5,0	15	0,150

EG SS4 SS6

GE-GCD
Gömlekli çelik dübel
Sleeve anchor
Монтажные болты (дюбели)

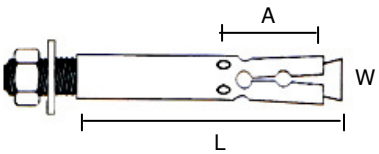

Part No	T	W	A	L	Max. Perm. load (kN)	Bending Moment	kg
GE-GCD-1	1	8	30	55	2	5,2	0,050
GE-GCD-2	1	8	40	75	2	5,2	0,060
GE-GCD-3	1	10	40	90	3	12,8	0,085
GE-GCD-4	1	10	40	110	3	12.8	0,103
GE-GCD-5	1,2	12	40	90	5	25,5	0,115
GE-GCD-6	1,2	12	40	110	5	25,5	0,135

EG SS4 SS6

Material options: Stainless steel AISI 304 (L) (A2) / AISI 316 (L) (A4), ST-37-42 Mild Steel, Corten A, Pregalvanized steel, Aluminum
Finish options : Hot Dip Galvanized to EN 1461, Electrogalvanized to TS 149, Electrostatic Paint Coated, Prime coated

GE-AE03
Tray suspension clamp
Kanal asma kelepçesi
Лоток приостановке части

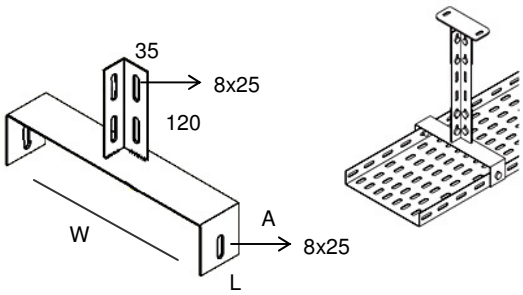

Part No	T	W	A	L	kg
GE-AE03-7	1,5	74	60	50	0,37
GE-AE03-10	1,5	104	60	50	0,39
GE-AE03-12	1,5	124	60	50	0,41
GE-AE03-16	1,5	164	60	50	0,43
GE-AE03-20	2	204	60	50	0,62

HDG EG SS4 SS6 ESB APB

GE-AE04
Tray suspension clamp
Kanal asma kelepçesi
Лоток приостановке части

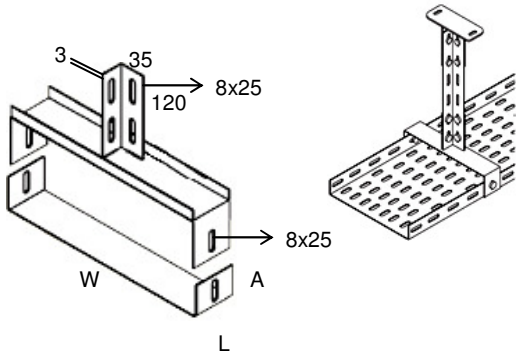

Part No	T	W	A	L	kg
GE-AE04-26	2	264	60	55	1,03
GE-AE04-30	2	304	60	55	1,10
GE-AE04-40	2	404	60	55	1,30
GE-AE04-45	2	454	60	55	1,40
GE-AE04-50	2	504	60	55	1,49
GE-AE04-60	2	604	60	55	1,68

HDG EG SS4 SS6 ESB APB

GE-KBL
Cable roller
Kablo çekme aparatı

Part No	Material
GE-KBL-1	Electro galvanized
GE-KBL-2	Stainless steel
GE-KBL-3	Epoxy paint coated

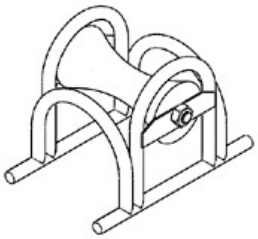

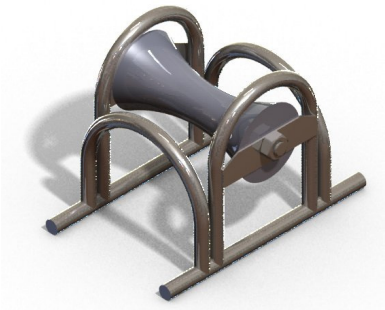

Material options: Stainless steel AISI 304 (L) (A2) / AISI 316 (L) (A4), ST-37-42 Mild Steel, Corten A, Pregalvanized steel, Aluminum
Finish options : Hot Dip Galvanized to EN 1461, Electrogalvanized to TS 149, Electrostatic Paint Coated, Prime coated

GE-AE06
M channel
M profil
Профиль

Part No	T	W	A	L	kg
GE-AE06-50	1,5	55	12	500	0,39
GE-AE06-100	1,5	55	12	1000	0,78
GE-AE06-300	1,5	55	12	3000	2,34

HDG PG EG SS4 SS6 ESB APB

GE-AE08
Inside clamp with M channel
M içten kavrama
Потолочная консоль

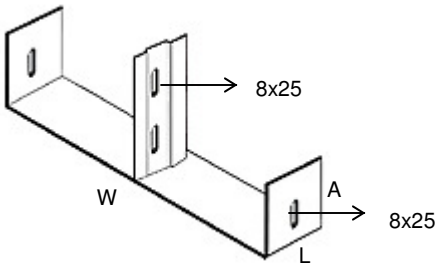

Part No	T	W	A	L	kg
GE-AE08 7	2,0	70	40	55	0,24
GE-AE08 10	2,0	100	40	55	0,28
GE-AE08 16	2,0	160	40	55	0,33
GE-AE08 20	2,0	200	40	55	0,37
GE-AE08 26	2,0	260	40	55	0,42

HDG EG SS4 SS6 ESB APB

GE-AE 07
M ceiling bracket
M tavan tespit
Потолочная консоль

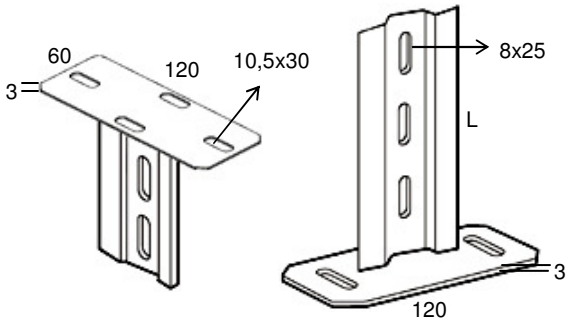

Part No	T	W	L	kg
GE-AE07 01	2	55	120	0,28

HDG EG SS4 SS6 ESB APB

Material options: Stainless steel AISI 304 (L) (A2) / AISI 316 (L) (A4), ST-37-42 Mild Steel, Corten A, Pregalvanized steel, Aluminum
Finish options : Hot Dip Galvanized to EN 1461, Electrogalvanized to TS 149, Electrostatic Paint Coated, Prime coated

GE- ZTK
Zemine tespit elemanı (Yükseltici)
Floor stand
Этаж кронштейн

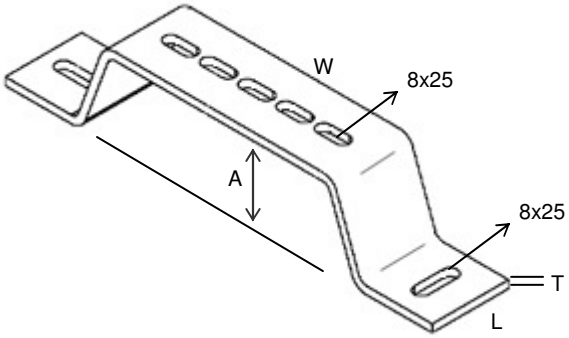

Part No	T	W	A	L	kg
GE-ZTK-1	2	100	40	40	0,17
GE-ZTK-2	2	150	40	40	0,20
GE-ZTK-3	2	200	40	40	0,23
GE-ZTK-4	2	225	40	40	0,25
GE-ZTK-5	2	250	40	40	0,26
GE-ZTK-6	3	300	40	50	0,55
GE-ZTK-7	3	400	40	50	0,67
GE-ZTK-8	3	450	40	50	0,73
GE-ZTK-9	3	500	40	50	0,79
GE-ZTK-10	3	600	40	50	0,91
GE-ZTK-11	3	750	40	50	1,10
GE-ZTK-12	3	900	40	50	1,27

HDG PG EG SS4 SS6 ESB APB

GE-BSU
Kiriş montaj elemanı
Beam suspension bracket
Потолочная консоль

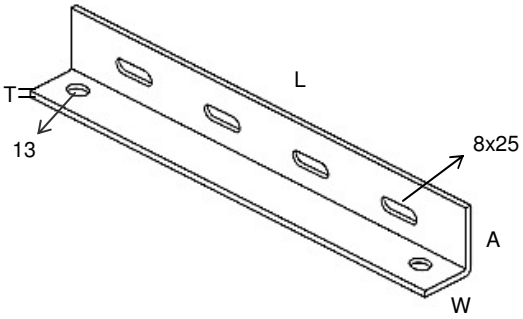

Part No	T	W	A	L	kg
GE-BSU-1	2	40	40	220	0.27
GE-BSU-2	2	40	40	260	0.33
GE-BSU-3	2	40	40	320	0.40
GE-BSU-4	2	40	40	360	0.45
GE-BSU-5	3	40	40	460	0.56
GE-BSU-6	3	40	40	560	0.70
GE-BSU-7	3	40	40	660	0.80

HDG PG EG SS4 SS6 ESB APB

Material options: Stainless steel AISI 304 (L) (A2) / AISI 316 (L) (A4), ST-37-42 Mild Steel, Corten A, Pregalvanized steel, Aluminum
Finish options : Hot Dip Galvanized to EN 1461, Electrogalvanized to TS 149, Electrostatic Paint Coated, Prime coated

GE-PBX
Pull box
Buat
Соединительная коробка

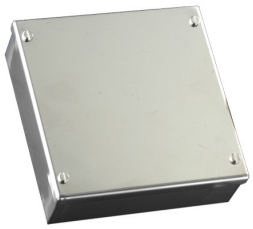

Part No	Size
GE-PBX-10	100x100
GE-PBX-20	200x100
GE-PBX-30	300x100
GE-PBX-40	300x150
GE-PBX-45	400x150

GE-BUP
Plate for junction box
Buat plakası
Тарелка для соединительная коробка

Part No	T	A	kg
GE-BUP-A	1,5	100	0,15
GE-BUP-B	1.5	100	0.11
GE-BUP-C-75	1.5	140	0.85
GE-BUP-C-105	1.5	140	1.00
GE-BUP-C-165	1.5	140	1.10
GE-BUP-C-205	1.5	140	1.25

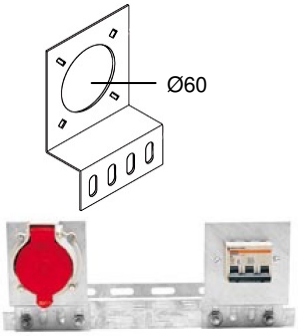

A

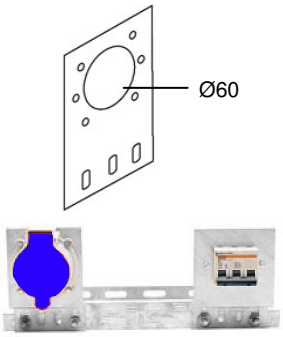

B

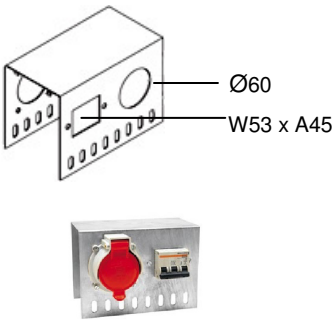

C

GE-PPK
Aluminum service box system
Aluminyum priz kutusu sistemi
Системы кабельных коробо, алюминий

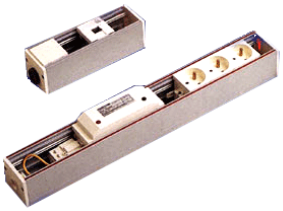

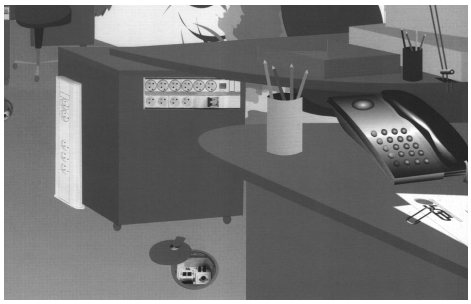

Aluminum channels cut to custom lengths as per project requirements and equipped with the required type of sockets.

Aluminyum profiller istenilen boylarda kesilir ve projenize gerekli tip soketler monte edilir.

Алюминиевые каналы разрезаются на пользовательские длин как по каждому проекту требованиям и оснащены Требуемый тип разъемов.

GERPAAS®

EN Support systems
FR Supportage
D Tragsystemen
RU Поддержка систем
TR Destek sistemleri

Material options: Stainless steel AISI 304 (L) (A2) / AISI 316 (L) (A4), ST-37-42 Mild Steel, Corten A, Pregalvanized steel, Aluminum
Finish options : Hot Dip Galvanized to EN 1461, Electrogalvanized to TS 149, Electrostatic Paint Coated, Prime coated

SUPPORT SYSTEMS FOR TUNNELS

TÜNELLER İÇİN KABLO TAŞIMA SİSTEMLERİ
КАБЕЛЬНЫЕ СИСТЕМЫ ДЛЯ ПОДДЕРЖКИ ТУННЕЛЯХ

Cable Supports For Tunnels

GE-TAE suspension system includes 1 base plate, 1 clamp, 1 welded bracket, U bolt(s) and fixing set. The suspension set is fixed to the rock bolt and secured with the U bolt. Cable raceways are mounted onto the clamp with M8 bolts and nuts through the pre slotted holes on cable raceway. The width of clamp is determined according to the size of the cable runway. The height of the clamp is also determined according to the side height of the cable raceway. The GE-TAE system components are available in hot dip galvanized, hot dip pregalvanized, electro galvanized finishes; and also in stainless steel grades of AISI 304, AISI 316, AISI 316L and 316Ti.

Tunnels mostly use ladders

Due to the high ventilation capacity that cable ladders provide, most of the highway tunnels and subsea tunnels throughout the world are installed with cable ladders instead of cable trays. The intensive corrosive environment in the tunnels is the main reason for the good corrosion resistance. New GERPAAS product GE-TAE tunnel type suspension system for cable ladders are manufactured of AISI 316 (L) grade stainless steel, which is also known as the “marine grade” A4, to maximize corrosion resistance. Other material and finish options also available upon request.

Systems For All Standard Dimensions

GE-TAE suspension systems are manufactured to suit all cable ladder widths and heights including widths of 50mm up to 1000mm in heights of 50mm to 150mm. Custom production is available upon request.

Advantage of GE-TAE Supports

GE-TAE brings simplicity to installation of cables in tunnels. Cabling can be made in both sides of the suspension system practically.

GE-TAE
Suspension set for cable ladders
Kablo merdiveni askı seti
Потолочная консоль

PATENTED

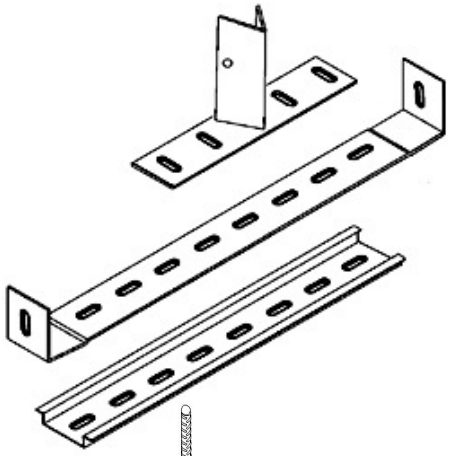

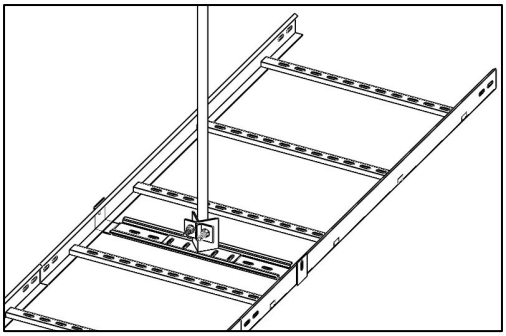

Fixing with U bolt and nuts

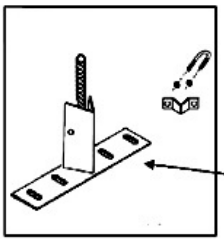

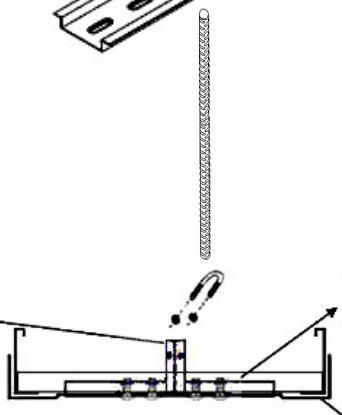

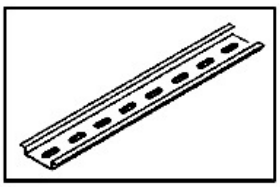

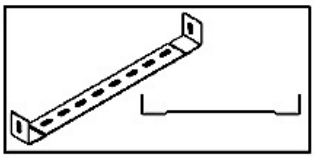

GERPAAS®

EN Support systems
FR Supportage
D Tragsystemen
RU Поддержка систем
TR Destek sistemleri

Material options: Stainless steel AISI 304 (L) (A2) / AISI 316 (L) (A4), ST-37-42 Mild Steel, Corten A, Pregalvanized steel, Aluminum
Finish options : Hot Dip Galvanized to EN 1461, Electrogalvanized to TS 149, Electrostatic Paint Coated, Prime coated

SUPPORT SYSTEMS FOR TUNNELS

TÜNELLER İÇİN KABLO TAŞIMA SİSTEMLERİ
КАБЕЛЬНЫЕ СИСТЕМЫ ДЛЯ ПОДДЕРЖКИ ТУННЕЛЯХ

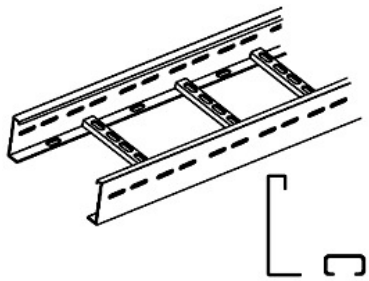

Tunnel type cable support systems are available in AISI 304, AISI 316 stainless steel and also hot dip galvanized finish to ISO EN 1461. Please contact us for additional material and finish options.

Tünel tipi kablo taşıma sistemleri, AISI 304, AISI 316 paslanmaz çelik ve ISO EN 1461 sıcak daldırma galvaniz olarak mevcuttur. Lütfen diğer malzeme ve kaplama seçenekleri için bize ulaşın.

Туннельного типа кабельных систем поддержки доступны в AISI 304, AISI 316 нержавеющая сталь, а также горячего цинкования Готово ISO EN 1461. Пожалуйста, свяжитесь с нами для получения дополнительной материальной и закончить варианты.

Load capacity of 1000kg per 3 meters span with 2.0 safety factor.

Stainless steel tunnel type cable ladders have a safe working load capacity of 1000 kg in 3m span.

Emniyetli taşıma yükü 1000kg / 3m

Tünel tipi paslanmaz çelik kablo merdivenlerinde emniyetli taşıma yükü 2.0 emniyet faktörüyle 1000kg/3m'dir.

Грузоподъемность 1000 кг / 3 метра

Безопасная рабочая нагрузка потенциала туннельного типа кабеля лестниц (нержавеющая сталь) составляет 1000 кг в 3 метра размаха.

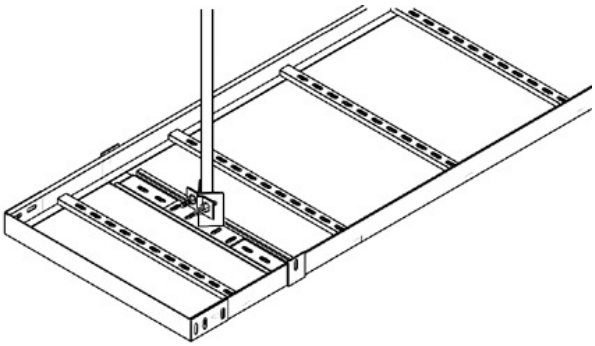

The recorded SWL is as per the standard tests performed on 1.5mm thick cable ladders. Higher performance detected with thicker materials.

1,5mm kalınlığındaki tünel tipi kablo merdivenlerinde test edilmiştir.

SWL записаны так же в стандартные испытания 1,5 мм лестниц толстых кабелей.

GE-RCB
Rock bolt
Nervürlü demir
Железные бар для бетона

HDG PG EG SS4 SS6 ESB APB

GE-CAM
Camera mounting bracket
Kamera montaj konsolu
Кронштейн для крепления камеры

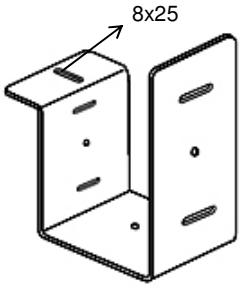

Manufactured to custom dimensions as per customer requirements.

Ölçüler müşteri ihtiyaçlarına göre belirlenir.

Размеры определяются в соответствии с просьбами заказчика.

HDG EG SS4 SS6 ESB APB

Material options: Stainless steel AISI 304 (L) (A2) / AISI 316 (L) (A4), ST-37-42 Mild Steel, Corten A, Pregalvanized steel, Aluminum
Finish options : Hot Dip Galvanized to EN 1461, Electrogalvanized to TS 149, Electrostatic Paint Coated, Prime coated

GE-BKC
Pipe clamp
Boru kelepçesi
Трубные зажимы

Part No	T	W	A	L	Nut	Bolt	SWL	kg
GE-BKC⅜	1,5	14-18	20	58,5	8	M5x15	200	0,052
GE-BKC½	1,5	20-24	20	62,5	8	M5x15	200	0,056
GE-BKC¾	1,5	25-30	20	68,5	8	M5x15	200	0,060
GE-BKC1	1,5	32-38	20	76	8	M6x20	200	0,070
GE-BKC1¼	1,5	39-46	20	91,5	8	M6x20	200	0,087
GE-BKC1½	1,5	48-52	20	99	8	M6x20	200	0,096
GE-BKC2	1,5	59-66	20	112	8	M8x25	250	0,110
GE-BKC2½	2	74-80	25	134	10	M8x25	250	0,210
GE-BKC3	2	86-94	25	146,5	10	M8x25	250	0,230
GE-BKC4	2	108-116	25	173	10	M8x25	250	0,310
GE-BKC5	2,5	134-143	25	199	12	M8x25	600	0,360
GE-BKC6	2,5	162-170	25	227	12	M8x25	600	0,400
GE-BKC8	2,5	216-222	25	281	12	M8x25	600	0,530

GE-TRK
Pipe clamp
Boru kelepçesi
Трубные зажимы

Part No	T	W	ØxL	A	kg
GE-TRK-1	0,8	12-15	M6x15	20	0,06
GE-TRK-2	0,8	16-19	M6x15	20	0,06
GE-TRK-3	0,8	21-23	M6x15	20	0,07
GE-TRK-4	0,8	26-28	M6x15	20	0,08
GE-TRK-5	0,8	32-35	M6x15	20	0,09
GE-TRK-6	1,0	40-43	M6x15	20	0,11
GE-TRK-7	1,0	44-49	M6x15	20	0,11

GERPAAS®

EN Support systems
FR Supportage
D Tragsystemen
RU Поддержка систем
TR Destek sistemleri

Material options: Stainless steel AISI 304 (L) (A2) / AISI 316 (L) (A4), ST-37-42 Mild Steel, Corten A, Pregalvanized steel, Aluminum
Finish options : Hot Dip Galvanized to EN 1461, Electrogalvanized to TS 149, Electrostatic Paint Coated, Prime coated

GE-BDK
Pipe clamp
Boru kelepçesi
Трубные зажимы

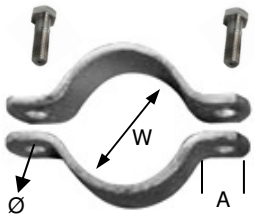

Part No	T	W	A	Ø	kg
GE-BDK-1	5	20	30	M10	0,16
GE-BDK-2	5	21,3	30	M10	0,16
GE-BDK-3	5	25	30	M10	0,17
GE-BDK-4	5	26,9	30	M10	0,18
GE-BDK-5	5	30	30	M10	0,19
GE-BDK-6	5	33,7	30	M10	0,20
GE-BDK-7	5	38	30	M10	0,21
GE-BDK-8	5	42,4	30	M10	0,23
GE-BDK-9	5	44,5	30	M10	0,25
GE-BDK-10	5	48,3	30	M10	0,26
GE-BDK-11	6	54	40	M10	0,51
GE-BDK-12	6	57	40	M10	0,53
GE-BDK-13	6	60,3	40	M10	0,56
GE-BDK-14	6	70	40	M10	0,60
GE-BDK-15	6	76,1	40	M10	0,64
GE-BDK-16	6	82	40	M10	0,62
GE-BDK-17	6	88,9	40	M10	0,73
GE-BDK-18	6	95	40	M10	0,95
GE-BDK-19	6	102	40	M10	1,48
GE-BDK-20	8	108	50	M12	1,52
GE-BDK-21	8	114,3	50	M12	1,59
GE-BDK-22	8	121	50	M12	1,65
GE-BDK-23	8	133	50	M12	1,71
GE-BDK-24	8	139,7	50	M12	1,81
GE-BDK-25	8	154	50	M12	1,90
GE-BDK-26	8	159	50	M12	1,95
GE-BDK-27	8	168,3	50	M12	1,99
GE-BDK-28	8	180	50	M12	2,15
GE-BDK-29	8	194	50	M12	2,35
GE-BDK-30	8	219,1	50	M12	2,61
GE-BDK-31	8	225	50	M12	2,75
GE-BDK-32	8	245	60	M12	3,44
GE-BDK-33	8	267	60	M12	3,72
GE-BDK-34	8	273	60	M12	3,75
GE-BDK-35	8	280	60	M12	4,00
GE-BDK-36	8	299	60	M12	4,10
GE-BDK-37	8	315	60	M12	4,30
GE-BDK-38	8	323,9	60	M12	4,52
GE-BDK-39	8	355,6	60	M12	4,78
GE-BDK-40	8	368,3	60	M12	4,95

Material options: Stainless steel AISI 304 (L) (A2) / AISI 316 (L) (A4), ST-37-42 Mild Steel, Corten A, Pregalvanized steel, Aluminum
Finish options : Hot Dip Galvanized to EN 1461, Electrogalvanized to TS 149, Electrostatic Paint Coated, Prime coated

GE-SPL
Sprinkler clamp
Sprinkler kelepçesi
Трубные зажимы

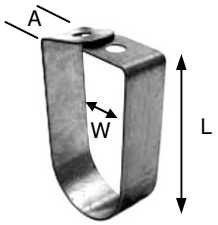

Part No	T	W	A	L	Ø	SWL (kN)	Kg
GE-SPL¾	1,5	30	25	71	10,5	1,5	0,066
GE-SPL1	1,5	36	25	83	10,5	1,5	0,075
GE-SPL1¼	1,5	46	25	95	10,5	1,5	0,088
GE-SPL1½	1,5	52	25	103	10,5	1,5	0,094
GE-SPL2	1,5	66	25	118	10,5	1,5	0,106
GE-SPL2½	2,5	78	25	142	10,5	3,9	0,208
GE-SPL3	2,5	92	25	166	10,5	3,9	0,236
GE-SPL4	2,5	116	25	209	10,5	3,9	0,284
GE-SPL5	3	142	25	249	13	7,5	0,400
GE-SPL6	3	170	25	284	13	7,5	0,456
GE-SPL8	3	222	25	376	16	13	0,966
GE-SPL10	3	275	25	495	16	13	1,230

GE-BYB
Pipe clamp
Boru kelepçesi
Трубные зажимы

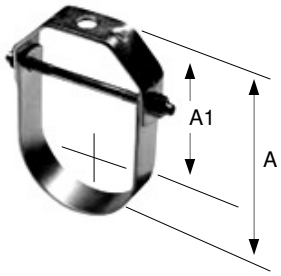

Part No	A	A1	SWL	kg
GE-BYB-1	133	95	51	0,50
GE-BYB-2	152	101,6	51	0,56
GE-BYB-3	197	137	63	0,78
GE-BYB-4	248	173	63	1,00
GE-BYB-5	298	210	86	1,39
GE-BYB-6	356	341	90	2,18

GE-BFK
Pipe clamp, heavy duty
Boru kelepçesi, ağır hizmet,
ТРУБНЫЕ ЗАЖИМЫ, большой грузоподъемности

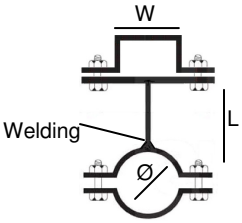

BRACKET SUSPENSION, TYPE A

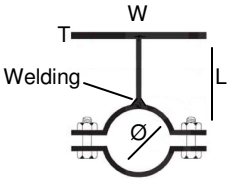

BRACKET SUSPENSION, TYPE B

Material options: Stainless steel AISI 304 (L) (A2) / AISI 316 (L) (A4), ST-37-42 Mild Steel, Corten A, Pregalvanized steel, Aluminum
Finish options : Hot Dip Galvanized to EN 1461, Electrogalvanized to TS 149, Electrostatic Paint Coated, Prime coated

GE-PBS
Base stand (for pipe support)
Taban ayağı (boru destek için)
Поддержка

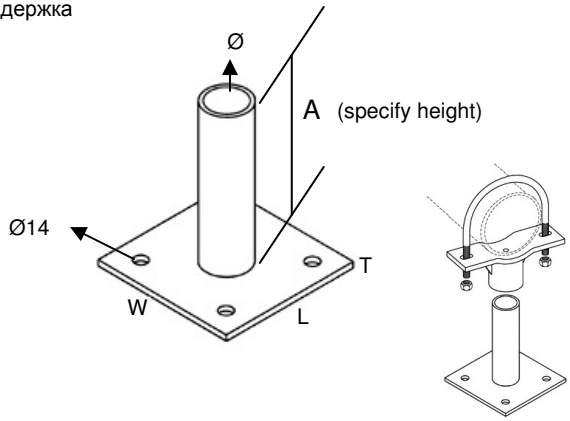

Part No	T	W	A	L	Ø
GE-PBS-1	6	150	V	150	20
GE-PBS-2	6	150	V	150	25
GE-PBS-3	6	150	V	150	32
GE-PBS-4	6	150	V	150	40
GE-PBS-5	6	150	V	150	50
GE-PBS-6	10	200	V	200	65
GE-PBS-7	10	200	V	200	65
GE-PBS-8	10	200	V	200	65
GE-PBS-9	10	300	V	300	65
GE-PBS-10	12	450	V	450	100

V: Variable

EG SS4 SS6

GE-PBST
Pipe saddle support
Boru destek elemanı
Поддержка

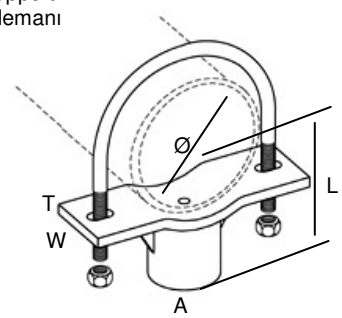

Part No	T	W	A	L	Ø
GE-PBST-1	6	80	40	100	65
GE-PBST-2	6	80	40	105	80
GE-PBST-3	10	90	50	120	100
GE-PBST-4	10	90	50	135	125
GE-PBST-5	10	90	50	176	150

GE-PSBP
Pipe support base
Boru tabandan destek elemanı
Поддержка

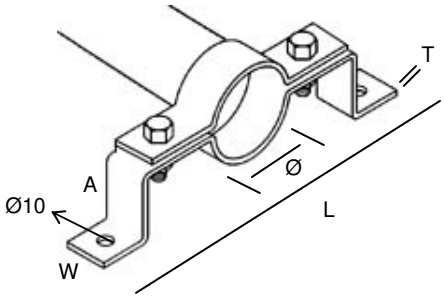

Part No	T	W	A	L	Ø
GE-PSBP-1	5	30	35	160	50
GE-PSBP-2	5	30	55	190	75
GE-PSBP-3	5	30	70	210	100
GE-PSBP-4	5	30	90	240	125

Material options: Stainless steel AISI 304 (L) (A2) / AISI 316 (L) (A4), ST-37-42 Mild Steel, Corten A, Pregalvanized steel, Aluminum
Finish options : Hot Dip Galvanized to EN 1461, Electrogalvanized to TS 149, Electrostatic Paint Coated, Prime coated

GE-UBO
U bolt
U bolt
У болтов

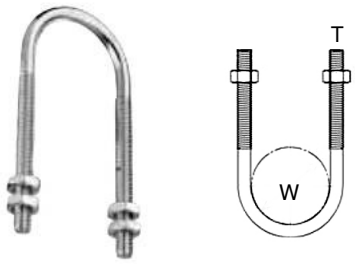

Part No	T	W	A	L	kg
GE-UBO½	6	24	30	50	0,049
GE-UBO¾	6	30	30	60	0,052
GE-UBO1	8	36	30	70	0,054
GE-UBO1¼	8	46	40	80	0,063
GE-UBO1½	8	52	50	90	0,069
GE-UBO2	10	64	50	100	0,137
GE-UBO2½	10	78	50	120	0,160
GE-UBO3	12	94	60	140	0,270
GE-UBO3½	12	106	65	150	0,280
GE-UBO4	12	118	65	160	0,330
GE-UBO5	12	146	65	200	0,400

EG SS4 SS6

GE-TKBK
Pipe clamp
Boru kelepçesi
Трубные зажимы

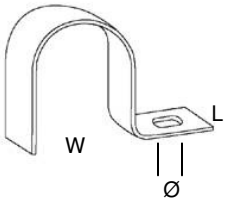

Part No	T	L	W	Ø	kg
GE-TKBK-1	2	25	½”	9	0,02
GE-TKBK-2	2	25	¾”	9	0,03
GE-TKBK-3	2	25	1”	9	0,05
GE-TKBK-4	2	25	1 ¼”	9	0,06
GE-TKBK-5	2	25	1 ½ ”	9	0,07
GE-TKBK-6	3	30	2”	9	0,09
GE-TKBK-7	3	30	2 ½”	9	0,10
GE-TKBK-8	3	30	3”	9	0,11
GE-TKBK-9	3	30	4”	9	0,12

HDG EG SS4 SS6

GE-CKBK
Pipe clamp
Boru kelepçesi
Трубные зажимы

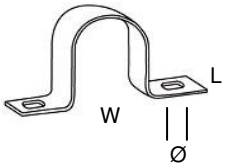

Part No	T	L	W	Ø	kg
GE-CKBK-1	2	25	½”	9	0,03
GE-CKBK-2	2	25	¾”	9	0,04
GE-CKBK-3	2	25	1”	9	0,05
GE-CKBK-4	2	25	1 ¼”	9	0,06
GE-CKBK-5	2	25	1 ½ ”	9	0,07
GE-CKBK-6	3	30	2”	9	0,09
GE-CKBK-7	3	30	2 ½”	9	0,11
GE-CKBK-8	3	30	3”	9	0,13
GE-CKBK-9	3	30	4”	9	0,17

HDG EG SS4 SS6

Material options: Stainless steel AISI 304 (L) (A2) / AISI 316 (L) (A4), ST-37-42 Mild Steel, Corten A, Pregalvanized steel, Aluminum
Finish options : Hot Dip Galvanized to EN 1461, Electrogalvanized to TS 149, Electrostatic Paint Coated, Prime coated

GE-BO
Galvanizli Çelik Boru
Galvanized Steel Conduit
Труба

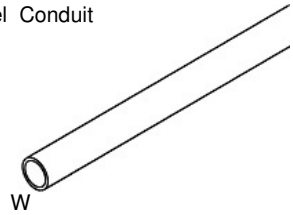

Part No	T	W	L	Kg/m
GE-BO-1	1,5	25	3000	1,00
GE-BO-2	1.5	42	3000	4.60

HDG EG SS4 SS6

GE-BOD
Boru dönüş
Conduit bend
Труба

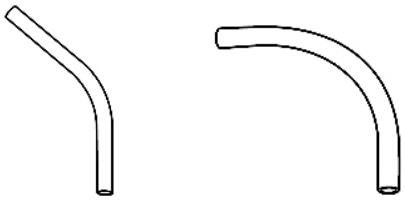

PVC cap
PVC başlık

Part No	T	W	°	Kg
GE-BOD-1	1	25	90	0.30
GE-BOD-2	1.5	42	90	0.90
GE-BOD-3	1	25	45	0.30
GE-BOD-4	1.5	42	45	0.90

GE-BBP
Boru bağlantıları
Conduit connectors
Труба разъемы

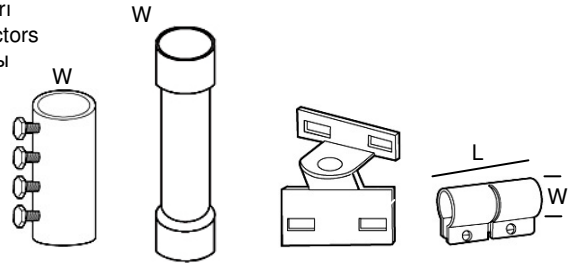

A B C D

Part No	T	W	L	kg
GE-BBP-D	1.5	30	80	1.00
GE-BBP-A	2	48	120	2.00
GE-BBP-C-1	2	42	80	0.12
GE-BBP-C-2	2	40	100	0.16
GE-BBP-B-1	1	25	120	0.30
GE-BBP-B-2	1.5	42	120	1.10
GE-BBP-E-1	1	30	250	0.25
GE-BBP-E-2	1.5	50	330	0.45
GE-BBP-F-1	1	30	200	0.36
GE-BBP-F-2	1.5	50	250	0.55
GE-BBP-G-1	1	30	250	0.25
GE-BBP-G-2	1.5	50	330	0.45
GE-BBP-H-1	2	-	-	-

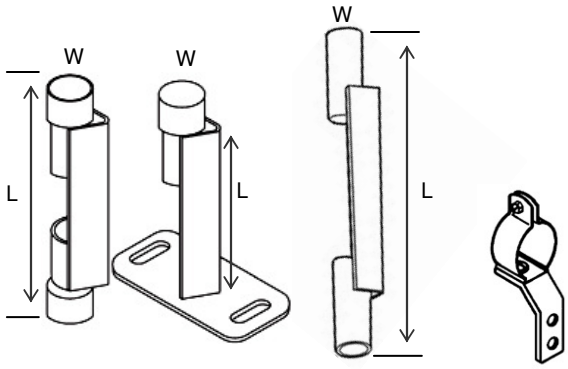

E F G H

Material options: Stainless steel AISI 304 (L) (A2) / AISI 316 (L) (A4), ST-37-42 Mild Steel, Corten A, Pregalvanized steel, Aluminum
Finish options : Hot Dip Galvanized to EN 1461, Electrogalvanized to TS 149, Electrostatic Paint Coated, Prime coated

U.L. LISTED CONDUITS U.L. ONAYLI BORULAR Трубы из оцинкованной стали

AFI-logo.jpg

GE-BO-EMT

EMT Galvanized Steel Conduit, non-threaded
EMT Galvanizli Çelik Boru, dişsiz
Оцинкованные стальные трубы, беспотоковая

U.L. Listed
Conforms to NEC regulations.

U.L. LISTED

Part No	Size (“)	Size (mm)	Kg	Ø (mm)	T (mm)	Pack
GE-BO-EMT-050	½”	16	1,36	17,90	1.07	10
GE-BO-EMT-075	¾”	21	2,09	23,40	1,25	10
GE-BO-EMT-100	1”	27	3,04	29,40	1,45	5
GE-BO-EMT-125	1 ¼”	35	4,58	38,40	1,65	5
GE-BO-EMT-150	1 ½”	41	5,26	44,20	1,65	1
GE-BO-EMT-200	2”	53	6,71	55,80	1,65	1
GE-BO-EMT-250	2 ½”	63	9,80	73,00	1,83	1
GE-BO-EMT-300	3”	78	11,93	88,90	1,83	1
GE-BO-EMT-350	3 ½”	91	15,83	101,60	2,11	1
GE-BO-EMT-400	4”	103	17,82	114,30	2,11	1

L: 3,05m (10 feet)

- IDEAL FOR USE IN BUILDINGS, HOTELS, MALLS.
-HIGH RESISTIVITY AGAINST FIRE AND HEAT

UL LISTED

U.L. Сертифицированный
U.L. Onaylı

GE-BO-IMC

IMC Galvanized Steel Conduit, threaded
IMC Galvanizli Çelik Boru, dişli
Трубы из оцинкованной стали, резьбовые

U.L. LISTED

U.L. Listed
Conforms to NEC regulations.

Part No	Size (“)	Size (mm)	Kg	Ø (mm)	T (mm)	Pack
GE-BO-IMC-050	½”	16	2,81	20,70	1,80	10
GE-BO-IMC-075	¾”	21	3,81	26,10	1,90	5
GE-BO-IMC-100	1”	27	5,40	32,80	2,20	5
GE-BO-IMC-125	1 ¼”	35	7,17	41,60	2,20	1
GE-BO-IMC-150	1 ½”	41	8,80	47,80	2,30	1
GE-BO-IMC-200	2”	53	11,61	59,90	2,40	1
GE-BO-IMC-250	2 ½”	63	20,00	72,60	3,50	1
GE-BO-IMC-300	3”	78	24,63	88,30	3,50	1
GE-BO-IMC-350	3 ½”	91	28,53	100,90	3,50	1
GE-BO-IMC-400	4”	103	31,75	113,40	3,50	1
GE-BO-RSC-500	5”	129	63,49	141,30	6,20	1
GE-BO-RSC-600	6”	155	83,45	168,30	6,80	1

- IDEAL FOR USE IN REFINERIES, OIL & GAS SITES
- HIGH RESISTIVITY AGAINST FIRE AND HEAT

L: 3,05m (10 feet)

UL LISTED

U.L. Сертифицированный
U.L. Onaylı

GERPAAS®

EN Support systems
FR Supportage
D Tragsystemen
RU Поддержка систем
TR Destek sistemleri

Material options: Stainless steel AISI 304 (L) (A2) / AISI 316 (L) (A4), ST-37-42 Mild Steel, Corten A, Pregalvanized steel, Aluminum
Finish options : Hot Dip Galvanized to EN 1461, Electrogalvanized to TS 149, Electrostatic Paint Coated, Prime coated

AFİ

GE-TC (511 – 520)
Zinc Set Screw Couplings
Vidalı Muf
Труба объединяющей

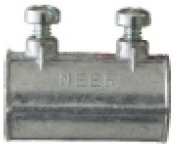

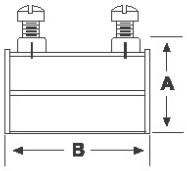

Part No	Size (“)	A (“)	B (“)
GE-TC-511	½”	1,02	1,57
GE-TC-512	¾”	1,28	1,94
GE-TC-513	1”	1,53	2,27
GE-TC-514	1 ¼”	1,99	2,63
GE-TC-515	1 ½”	2,23	2,94
GE-TC-516	2”	2,69	3,5
GE-TC-517	2 ½”	3,26	4,01
GE-TC-518	3”	3,9	4,51
GE-TC-519	3 ½”	4,46	5,00
GE-TC-520	4”	4,97	5,26

GE-TC (611 – 620)
Compression Couplings
Sıkmalı Muf
Труба объединяющей

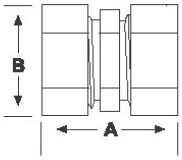

Part No	Size (“)	A (“)	B (“)
GE-TC-611	½”	1,02	0,95
GE-TC-612	¾”	1,66	1,26
GE-TC-613	1”	2,02	1,50
GE-TC-614	1 ¼”	2,18	1,92
GE-TC-615	1 ½”	3,10	2,25
GE-TC-616	2”	3,06	2,75
GE-TC-617	2 ½”	3,63	3,27
GE-TC-618	3”	3,52	3,89
GE-TC-619	3 ½”	3,77	4,40
GE-TC-620	4”	4,06	4,89

GE-TC (501 - 510)
Zinc Set Screw Connectors
Sıkmalı Rakor
Труба объединяющей

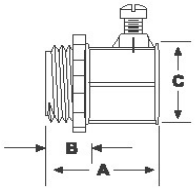

Part No	Size (“)	A (“)	B (“)	C (“)
GE-TC-501	½”	1,12	0,37	1,04
GE-TC-502	¾”	1,37	0,37	1,27
GE-TC-503	1”	1,49	0,49	1,54
GE-TC-504	1 ¼”	1,97	0,59	1,97
GE-TC-505	1 ½”	2,26	0,74	2,24
GE-TC-506	2”	2,50	0,74	2,67
GE-TC-507	2 ½”	3,10	1,07	3,27
GE-TC-508	3”	3,31	1,60	3,91
GE-TC-509	3 ½”	3,56	1,03	4,51
GE-TC-510	4”	3,76	1,11	4,97

GE-TC (601 - 610)
Compression Connectors
Sıkmalı Rakor
Труба объединяющей

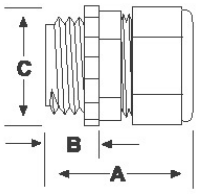

Part No	Size (“)	A (“)	B (“)	C (“)
GE-TC-601	½”	1,27	0,42	1,95
GE-TC-602	¾”	1,25	0,42	1,23
GE-TC-603	1”	1,59	0,54	1,49
GE-TC-604	1 ¼”	1,63	0,58	1,93
GE-TC-605	1 ½”	2,30	0,74	2,25
GE-TC-606	2”	2,43	0,74	2,75
GE-TC-607	2 ½”	2,86	0,99	3,29
GE-TC-608	3”	2,90	1,01	3,89
GE-TC-609	3 ½”	2,95	1,10	4,39
GE-TC-610	4”	2,73	1,00	4,95

GERPAAS®

EN Support systems
FR Supportage
D Tragsystemen
RU Поддержка систем
TR Destek sistemleri

Material options: Stainless steel AISI 304 (L) (A2) / AISI 316 (L) (A4), ST-37-42 Mild Steel, Corten A, Pregalvanized steed, Aluminum
Finish options : Hot Dip Galvanized to EN 1461, Electrogalvanized to TS 149, Electrostatic Paint Coated, Prime coated

Indoor Boxes Dahili Buatlar Закрытый Распределительные коробки

TP-432 (4SD-3/4)

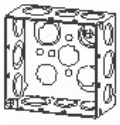

UL LISTED

ŞEKİL *(SHAPE)*	:	Derin Tip Kare Çelik Buat
EBAT *(SIZES)*	:	102x102x54 mm
HACİM *(VOLUME)*	:	30.3 cu inch
PATLAMA DELİKLERİ (inch) *(KNOCKOUTS)*	:	8x3/4" + 2x1/2"+ 2x1/2"&3/4"E

TP-436 (4SD-1)

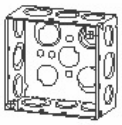

ŞEKİL *(SHAPE)*	:	Derin Tip Kare Çelik Buat
EBAT *(SIZES)*	:	102x102x54 mm
HACİM *(VOLUME)*	:	30.3 cu inch
PATLAMA DELİKLERİ (inch)) *(KNOCKOUTS)*	:	8x1" + 2x1/2"+ 2x1/2"&3/4"E

TP-224 (222-OW)

ŞEKİL *(SHAPE)*	:	Dikdörtgen Alçıpan Tipi Buat
EBAT *(SIZES)*	:	76x51x54 mm
HACİM *(VOLUME)*	:	30.5 cu inch
PATLAMA DELİKLERİ (inch) *(KNOCKOUTS)*	:	7x1/2"

TP-294 (4OD-SPL)

ŞEKİL *(SHAPE)*	:	Derin Tip çelik Sekizgen Buat
EBAT (SIZES)	:	102x102x54 mm
HACİM *(VOLUME)*	:	21.5 cu inch
PATLAMA DELİKLERİ (inch) *(KNOCKOUTS)*	:	4x1" + 3x1/2" + 2x3/4"

TP-278 (4O-SPL)

ŞEKİL *(SHAPE)*	:	Yuvarlak Çelik Buat
EBAT *(SIZES)*	:	102x102x38 mm
HACİM *(VOLUME)*	:	15.5 cu inch
PATLAMA DELİKLERİ (inch) *(KNOCKOUTS)*	:	5x1/2" + 4x3/4"

TP-328 (8413)

ŞEKİL *(SHAPE)*	:	Yuvarlak Düz kapak
EBAT *(SIZES)*	:	102x102 mm
PATLAMA DELİKLERİ (inch)) *(KNOCKOUTS)*	:	1x1/2"

TP-414 (4S-SPL-DR)

ŞEKİL *(SHAPE)*	:	Kare Çelik Buat
EBAT *(SIZES)*	:	102x102x38 mm
HACİM *(VOLUME)*	:	21.0 cu inch
PATLAMA DELİKLERİ (inch) *(KNOCKOUTS)*	:	11x1/2" + 6x3/4"

TP-472 (8465) (TP-478 (8474)

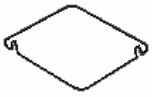

ŞEKİL *(SHAPE)*	:	Kare Düz kapak/Kare Delikli Kapak
EBAT *(SIZES)*	:	102x102 mm
PATLAMA DELİKLERİ (inch) *(KNOCKOUTS)*	:	1x1/2"

UTILITY BOXES-4"x 21/8"

TP588 (TP647-1 1/4 Deep)

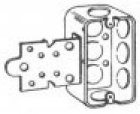

TP591

TP592,TP600, TP602

TP598 (TP605-2 1/8 Deep)

TP594, TP596, TP604, TP606, TP595 (4 1/8 x 2 3/8)

KNOCKOUTS

Product Number	Bracket	Sides	Bottom
1 1/2 DEEP – 10.3 CUBIC INCH CAPACITY			
TP588	—	8-1/2"	3-1/2"
TP591	"F", Set 1/4"	5-1/2"	3-1/2"
1 1/2 DEEP EXTENSION RINGS – 10.3 CUBIC INCH CAPACITY			
TP592	—	8-1/2"	—
1 7/8 DEEP – 13.0 CUBIC INCH CAPACITY			
TP594	—	8-1/2"	3-1/2"
TP596	—	6-3/4"	3-1/2"
TP598	"S", SET 1/2	5-1/2"	3-1/2"
EXTENSION RINGS			
TP600	—	8-1/2"	—
TP602	—	6-3/4"	—
2 1/8 DEEP – 14.5 CUBIC INCH CAPACITY			
TP604	—	8-1/2"	3-1/2"
TP606	—	6-3/4"	3-1/2"
TP605	"S", Set 1/2"	5-1/2"	3-1/2"
TP595 (18.3 Cu.In. Capacity)		8-1/2"	3-1/2"

GERPAAS®

EN Support systems
FR Supportage
D Tragsystemen
RU Поддержка систем
TR Destek sistemleri

Material options: Stainless steel AISI 304 (L) (A2) / AISI 316 (L) (A4), ST-37-42 Mild Steel, Corten A, Pregalvanized steel, Aluminum
Finish options : Hot Dip Galvanized to EN 1461, Electrogalvanized to TS 149, Electrostatic Paint Coated, Prime coated

Instrumentation stands and pipe supports

Instrumentation stands and pipe supports are manufactured as per project specifications and dimensions. GERPAAS offers a variety of material and finish options for this product line including stainless steel grades (A2 / A4), hot dip galvanized, electro galvanized, Electrostatic paint coated, prime coated.

Enstrumantasyon standları ve boru destekleri

Enstrumantasyon standları ve boru destekleri proje özelliklerine ve ölçülerine göre üretilmektedir. GERPAAS bu ürün grubunu birçok malzeme ve kaplama seçeneğinde sunmaktadır; sıcak daldırma galvaniz, elektro galvaniz, paslanmaz çelik AISI 304, AISI 316(L), Elektrostatik boyalı gibi.

Инструментальные стенды и опор рубопроводов

Инструментальные стенды и опор трубопроводов производятся в соответствии с проектным спецификациям и размеры. GERPAAS предлагает широкий выбор материалов и отделки варианта этой линейки продуктов в том числе нержавеющих сталей (A2 / A4), горячее цинкование, электро оцинкованные, Электростатический краской, премьер-покрытием.

AREAS OF USE

Oil & Gas Refineries
LNG Refineries
Chemical Plants
Uranium Plants
Oil Rigs
Offshore Platforms
GSM Substations
Production Plants
Warehouses
Piping Zones
Tribunes
And more....

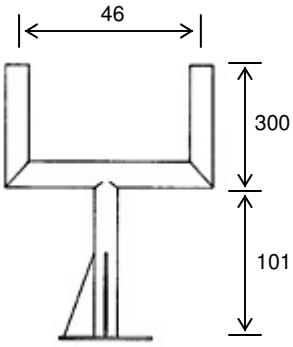

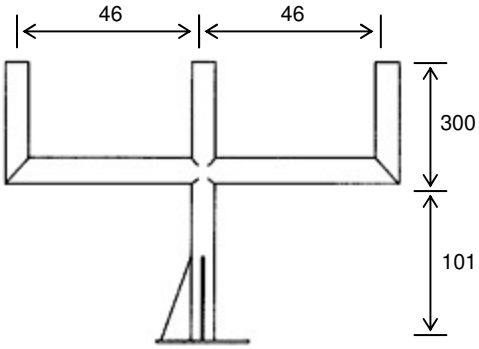

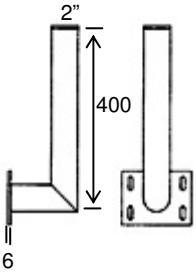

GERPAAS®

EN Support systems
FR Supportage
D Tragsystemen
RU Поддержка систем
TR Destek sistemleri

Material options: Stainless steel AISI 304 (L) (A2) / AISI 316 (L) (A4), ST-37-42 Mild Steel, Corten A, Pregalvanized steel, Aluminum
Finish options : Hot Dip Galvanized to EN 1461, Electrogalvanized to TS 149, Electrostatic Paint Coated, Prime coated

We provide custom solutions for your instrumentation and electrical projects!

With our experience and expertise in steel fabrication works, we offer tailor-made solutions for your stand and pipe support requirements as per your requirements. With our diverse material and finish options we can solve your custom product needs.

Ideal Corrosion Protection

Many material and finish options exist for corrosion protection and we offer our clients these methods with high quality services.

These include the following;

Hot dip galvanizing as per EN 1461, electro galvanizing, and also painting options including electro static powder coating, prime coating. Additionally stainless steel grades of AISI 304 (A2) and AISI 316 (A4) are available in standard.

Enstrümantasyon ve elektrik projeleriniz için özel çözümler sunuyoruz!

Elektrik ve enstrümantasyon projelerinizde stand ve boru destek üniteleri ihtiyaçlarınızı karşılamaktayız. Zengin metal malzeme ve kaplama seçenekleri ile yurt içi ve yurt dışı projelerde şartnamelere uygun kaliteli ve ekonomik çözümler sunuyoruz. Detaylı bilgi için firmamızla irtibata geçiniz.

Korozyona karşı ideal koruma

Korozyondan korunmak için birçok malzeme ve kaplama seçeneği mevcuttur.
Kaplama yöntemlerimiz şunlardır;
Sıcak daldırma galvaniz EN 1461, elektro galvaniz ve elektro statik toz boya.
Malzeme seçenekleri;
AISI 304 (A2) ve AISI 316 (A4) kalite paslanmaz çelik.

Мы предлагаем индивидуальные решения для электрических приборов и проектов

С нашим опытом и знаниями в стальном производстве работ, мы предлагаем

индивидуальный Решения для Вашего стенда и труб поддержку требований в

соответствии с вашимитребованиями. С нашим разнообразного материала и

отделки вариантов, мы можем решить ваш продукт пользовательских потребностей.

Идеальная защита от коррозии

Много материальных и закончить существуют возможности для защиты от коррозии,

и мы предлагаем нашим клиентам эти методы с высоким качеством услуг.

К ним относятся следующие; Горячего цинкования в соответствии с EN 1461,

электро цинкования, а также картины варианты, включая электро статический

порошковое покрытие, грунтовка. Кроме того нержавеющих марок сталей по AISI

304 (A2) и AISI 316 (A4) доступны в стандартной.

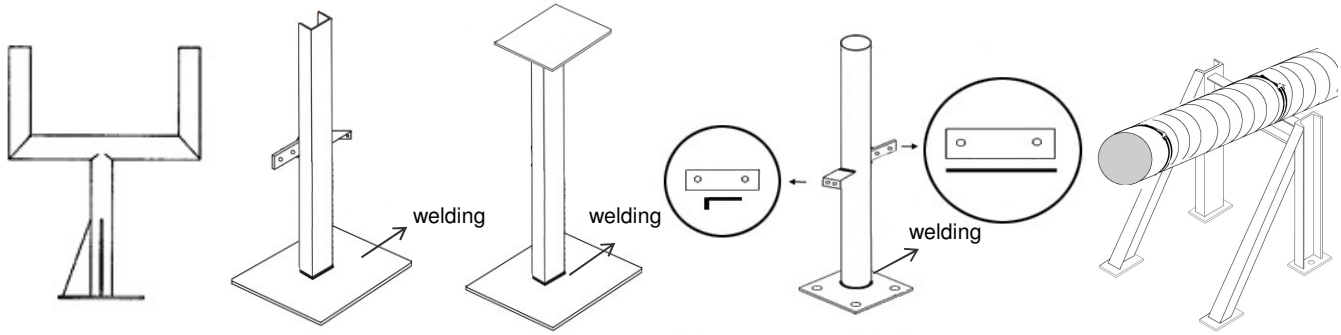

TYPE A TYPE B TYPE C TYPE D TYPE E

GERPAAS®

EN Support systems
FR Supportage
D Tragsystemen
RU Поддержка систем
TR Destek sistemleri

Chassis for Junction Boxes and Instrumentation

Fabrication for chassis for junction boxes and instrumentation is available upon request. Dimensions vary according to project specifications. Junction boxes are shown on the drawings for illustration purposes.
Hot dip galvanized and stainless steel material & finish options offered. Also electrostatic paint coating is available upon request.

Hıgh Qualıty And Cost Effectıve Solutıons

Small parts of junction box supports like sun shades, earthing parts, and similar items can be delivered with or without preassembly.

CAD drawings or blue prints of the parts can be used where required.

Elektrik Panoları ve Enstrumantasyon Şasileri

Elektrik panoları ve enstrumantasyon şasileri istek üzerine üretilir. Boyutları ve özellikleri projeye göre değişmektedir.
Kaplama yöntemlerimiz şunlardır;
Sıcak daldırma galvaniz EN 1461 ve elektro statik toz boya.
Malzeme seçenekleri;
AISI 304 (A2) ve AISI 316 (A4) kalite paslanmaz çelik.

Elektrik Panoları ve Enstrumantasyon Şasileri için Yüksek Kaliteli ve Düşük Maliyetli Etkin Çözümler

Şasiler, gölgelik, topraklama komponantları ve diğer parçalar ile birlikte (montajlı/montajsız halde) teslim edilmektedir.
Bu parçaların CAD ve proje çizimlerine gerek duyulabilmektedir.

Continuous welded

Шасси для Распределительные коробки и оборудование

Мы, производство стали и нержавеющей стали для шасси Распределительные коробки в соответствии с требованиями заказчика.
К ним относятся следующие; Горячего цинкования в соответствии с EN 1461, электро цинкования, а также картины варианты, включая электро статический порошковое покрытие, грунтовка. Кроме того нержавеющих марок сталей по AISI 304 (A2) и AISI 316 (A4) доступны в стандартной.

Высокое качество и экономически эффективные решения

Малые частей распределительной коробки поддерживает как штор, заземление частей, и другие аналогичные предметы могут быть доставлены с или без preassembly.
CAD чертежи или синие отпечатки части могут быть использованы в случае необходимости.

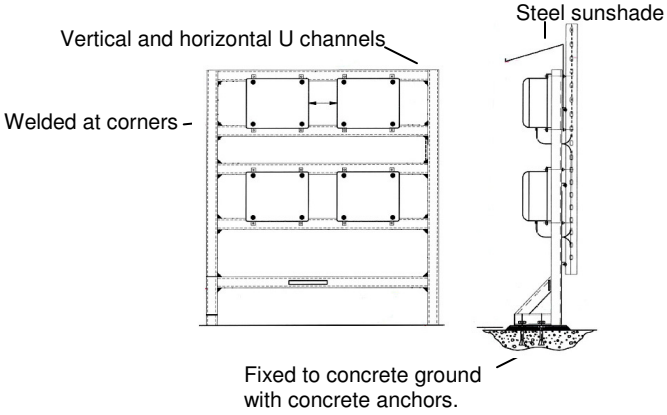

Steel chassis can be fabricated in custom dimensions as per customer requirements.

Fasteners & Accessories

GE-KC
Bolt
Cıvata
винтового

EG SS4

Part No	Size	Kg	Pack
GE-KC-1	6X12	0.010	2000
GE-KC-2	8X15	0.015	2000
GE-KC-3	8X20	0.018	2000

GE-HXC
Hexagonal head bolt
Altı köşe başlı cıvata
Болт

EG SS4

Part No	Size	Kg	Pack
GE-HXC-620	6X20	0.02	2000
GE-HXC-825	8X25	0.04	1000
GE-HXC-835	8X35	0.05	1000
GE-HXC-1020	10X20	0.09	1000
GE-HXC-1035	10X35	0.09	1000
GE-HXC-1235	12X25	0.11	1000

GE-S
Nut
Somun
Редукции

GE-SF
Flanged nut
Flanşlı somun

EG SS4

Part No	Size	Kg	Pack
GE-S-6	M6	0.003	1000
GE-S-8	M8	0.005	1000
GE-S-10	M10	0.012	1000
GE-S-12	M12	0.017	1000

GE-PUL
Washer
Pul
Редукции

EG SS4

Part No	Size	Kg	Pack
GE-PUL-6	M6	0.001	1000
GE-PUL-8	M8	0.002	1000
GE-PUL-10	M10	0.005	1000
GE-PUL-12	M12	0.007	1000

GE-PULR
Spring washer
Yaylı rondela
пружинная шайба

EG SS4

Part No	Size	Kg	Pack
GE-PULR-6	M6	0.001	1000
GE-PULR-8	M8	0.002	1000
GE-PULR-10	M10	0.005	1000
GE-PULR-12	M12	0.007	1000

GE-PULT
Lock washer
Tırtırlı pul
Шайба стопорная

EG SS4

Part No	Size	Kg	Pack
GE-PULT-6	M6	0.001	1000
GE-PULT-8	M8	0.002	1000
GE-PULT-10	M10	0.005	1000
GE-PULT-12	M12	0.007	1000

GE-US
Long nut
Uzun somun
Длинный гайка

EG SS4

Part No	Size	Kg	Pack
GE-US-6	6X30	0,030	500
GE-US-8	8X30	0.030	500
GE-US-10	10X50	0.050	500
GE-US-12	12X50	0.070	500

GE-GCD
Sleeve Anchor
Gömlekli Çelik Dübel
монтажный болт

EG SS4

Part No	Size	Kg	Pack
GE-GCD-1	8X55	0.050	1000
GE-GCD-2	8X75	0.060	1000
GE-GCD-3	10X90	0.085	500
GE-GCD-4	10X110	0.103	500
GE-GCD-5	12X90	0.115	500
GE-GCD-6	12X110	0.135	500

GE-KCD
Through Bolt
Klipsli Çelik Dübel
монтажный болт

EG SS4

Part No	Size	Kg	Pack
GE-KCD-1	8X80	0.050	1000
GE-KCD-2	10X90	0.075	1000
GE-KCD-3	12X110	0.120	500

Fasteners & Accessories

GE-KAT
Tij
Thread rod
Гихон

EG SS4

Part No	Size	Kg	Pack
GE-KAT-1	8X200	0.06	1
GE-KAT-2	8X500	0.15	1
GE-KAT-3	8X1000	0.30	1
GE-KAT-4	8X2000	0.60	1
GE-KAT-5	10X1000	0,48	1
GE-KAT-6	10X3000	1,45	1
GE-KAT-7	12X1000	0,70	1
GE-KAT-8	12X3000	2,10	1
GE-KAT-9	14X1000	0,90	1
GE-KAT-10	14X3000	2,70	1

GE-LCN
PVC strip
PVC conta
Резиновые прокладки

Part No	Size	Kg	Pack
GE-LCN-1	-	-	1

GE-LCND
PVC strip double
PVC conta, çiftli
Резиновые прокладки

Part No	Size	Kg	Pack
GE-LCND-1	-	-	1

GE-SPRAY
Zinc spray
Çinko sprey
Спрей цинка

Part No	Size	Kg	Pack
GE-SPRAY-1	400ml	0.40	12

GE-K
Pin
Kupilya
штифт

EG SS4

Part No	Size	Kg	Pack
GE-K	8x75	0,03	1

GE- BFEC-1
Rounded flexible earth bar, Copper(Cu)
Yuvarlak esnek bara, Bakır

Part No	mm²	Ø	L
GE-BFEC-1-10	10	9	150
GE-BFEC-1-16	16	11	200
GE-BFEC-1-35	35	11	250
GE-BFEC-1-50	50	11	300

GE- BFEC-2
Yuvarlak esnek bara, Bakır kalaylı
Rounded flexible earth bar,CuSn

Part No	mm²	Ø	L
GE-BFEC-2-10	10	9	150
GE-BFEC-2-16	16	11	200
GE-BFEC-2-35	35	11	250
GE-BFEC-2-50	50	11	300

GE-BFEC-3
Yassı esnek bara, Bakır
Flat flexible bar, Copper(Cu)

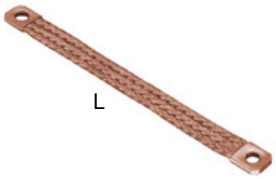

Part No	mm²	Ø	L
GE-BFEC-3-10	10x1	9	150
GE-BFEC-3-14	14x1,5	11	200
GE-BFEC-3-20	20x1,5	11	250
GE-BFEC-3-25	25x3	11	300

GE- BFEC-4
Yassı esnek bara, Bakır kalaylı
Flat flexible bar, CuSn

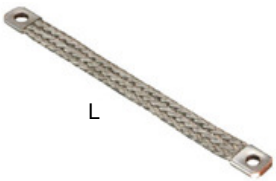

Part No	mm²	Ø	L
GE-BFEC-4-10	10x1	9	150
GE-BFEC-4-14	14x1,5	11	200
GE-BFEC-4-20	20x1,5	11	250
GE-BFEC-4-25	25x3	11	300

GERPAAS®

Technical
Teknik
ТЕХНИЧЕСКАЯ ИНФОРМАЦИЯ

GERPAAS®

Material options: Stainless steel AISI 304 (L) (A2) / AISI 316 (L) (A4), ST-37-42 Mild Steel, Corten A, Pregalvanized steel, Aluminum
Finish options : Hot Dip Galvanized to EN 1461, Electrogalvanized to TS 149, Electrostatic Paint Coated, Prime coated

	Prefix	Kısaltmalar	Сокращения
	EN	**TR**	**RU**
HDG	Hot dip galvanized	Sıcak daldırma galvaniz	Горячее цинкование
EG	Electro galvanized	Elektrogalvaniz	Электро оцинкованный
ESB	Electrostatic powder coated	Elektrostatik toz boya	Электростатической порошковой краской
AL	Aluminum	Aluminyum	Алюминиевый
APB	Prime coated	Antipas boyalı	Коррозия доказательство краска
CU	Copper	Bakır	медь
SS4	AISI 304 grade stainless (A2)	304 kalite paslanmaz çelik	304 нержавеющая сталь
SS6	AISI 316 grade stainless (A4)	316 kalite paslanmaz çelik	316 нержавеющая сталь
Mm	Milimeter	Milimetre	Милиметрические
A	Side height	Kenar yüksekliği	Высота борта
W	Width	Genişlik	ширина
L	Length	Uzunluk	Длина
µm	Micron	Mikron	Микрон
SWL	Safe working load	Emniyetli çalışma yükü	Грузоподъемность
Def	Deflection	Sehim	отклонение
M	Meter	Metre	Мера
Pc	Piece	Adet	Каждый
N	Nevton	Newton	Ньютон
Lbs	Pound	Pound	фунт
Kg	Kilogram	Kilogram	Килограмм
UDL	Uniformly distributed loads	Uniform yükler	Равномерно распределенные нагрузки
F	Fahrenheit	Fahrenheit	Фаренгейт
C	Celcius	Celcius	Цельсий

GERPAAS®

ADVANTAGES OF GERPAAS® CABLE MANAGEMENT SYSTEMS
GERPAAS® KABLO TAŞIMA SİSTEMLERİNİN GETİRDİĞİ AVANTAJLAR
ПРЕИМУЩЕСТВА GERPAAS® КАБЕЛЬНЫЕ СИСТЕМЫ УПРАВЛЕНИЯ

GERPAAS® Cable Tray Systems are;
- Designed with standardized slot patterns enabling easy interconnections,
- Low maintenance costs
- Less expensive systems compared to electrical conduits and other wiring systems,
- Very reliable and safe compared to other wiring systems,
- Competitive pricing strategy,
- Custom production availability upon request,
- Offers a diverse selection of materials and finishes to meet your demanding environmental conditions,
- Adaptable to new needs and technology
- Fire resistance enables maximum safety
- Can be observed, and tested practically,
- Easy to store and protect,
- Suitable for all types of finishing variants,
- Available in a variety of material options.
- Cable management systems are widely known universal systems

---

GERPAAS® Kablo Taşıma Sistemleri;
- Standart delik düzeni ile uygulaması pratiktir.
- Bakım maliyetleri düşüktür.
- Diğer kablolama sistemlerine göre daha ekonomik çözümdür.
- Diğer kablolama sistemlerine göre daha güvenilirdir.
- Ekonomik fiyatlandırma yapısına sahiptir.
- Özel ölçülerde üretim yapılma imkanı
- Çevre koşullarına göre uygun birçok malzeme ve kaplama seçeneği
- Yeni ihtiyaçlara ve teknolojiye göre sistem üzerinde kolayca değişiklik yapılabilir.
- Yüksek havalandırma kapasitesiyle ve metalik yapısıyla yangına karşı dayanıklıdır
- Sistemi gözlemleyip kontrol ve test edebilmek kolaydır.
- Depolamak ve muhafaza etmek kolaydır.
- İmalat sonrası tüm kaplama tekniklerine uygundur.
- Birçok malzeme seçeneği mevcuttur.
- Kablo taşıma sistemleri herkes tarafından bilinen, uygulanan ve tercih edilen sistemlerdir.

GERPAAS® Кабельные Системы управления;
- Стандартный дыру дизайн
- Низкие затраты на обслуживание
- Менее дорогие системы по сравнению с другими электрическими системами
- Очень надежным и безопасным по сравнению с другими электрическими системами
- Конкурентоспособные цены
- Возможно изготовление продукции на заказ
- Разнообразная диапазон материала и отделки параметры в соответствии с условиями окружающей среды
- Адаптироваться к новым потребностям и технологиям
- Пожарная устойчивость
- Можно наблюдать и испытан легко.
- Могут быть сохранены и охраняются легко.
- Подходит для всех покрытий варианты.
- Доступные в различных вариантах металлического материала.
- Кабельные системы управления широко известны универсальные системы.

GERPAAS®

DEFINITIONS

Cable tray system is the structure that carries the cabling of an electrical system and distributes all the cables to the intended machinery and equipment. There are sub systems within a cable tray system including the support and suspension of the cable trays and their components.

Cable tray: is a rigid structure for fastening, supporting, holding or distributing cables. Cable trays are manufactured in single flanged and return flanged options in standard. Also cable trays are available in perforated and non-perforated options.

Cable ladder: is a prefabricated structure consisting of two longitudinal side rails connected by pre welded at the inner side of the rails.

Splice plate: is a connector piece which joins cable tray and cable ladder straight sections and fittings or both.

Flat bend: is an angular connection on horizontal cable runs. Available angles in flat bends are 30, 45, 60 and 90 degrees.

Tee bend: is a cable tray fitting joining cable trays in 3 directions at 90˚ intervals in the same plane. Tee bends are offered as “equal” and “unequal” widths.

Crossing: is for joining cable trays in 4 directions at 90˚ intervals in the same plane.

Reducer: is for joining cable trays of different widths in the same plane. Abrupt reducers, however, do not have a bottom plane or a rung to support cables but are used only to connect the cable trays of different widths just like the splice plates.

Vertical bend: is for joining cable trays of the same widths in different vertical levels. Available as inside and outside types.

End plate: is for ending the cable tray run.

Cover: is for closing the top of the cable tray or cable ladder straight section or its component completely or partially depending on the preferred type of cover lid.

TANIMLAR

Kablo kanalı sistemi bir elektriksel düzeninde yer alan kabloları taşıyan ve amaçlanan makineye, ekipmana veya noktaya kadarki dağıtımını sağlayan yapıdır. Kablo kanalı sisteminde sistemin kendisini taşıyan, destekleyen alt sistemlerde mevcuttur.

Kablo kanalı: üzerinde kabloları bağlamak, taşıma, tutma ve/ veya dağıtmayı sağlayan rijit yapıdır. Tek bükümlü ve ağır hizmet bükümlü olarak mevcuttur. Delikli ve deliksiz olarak üretilmektedir.

Kablo merdiveni: paralel iki uzun profil ve aralarına belirli aralıklarla kaynaklanmış basamaklardan oluşan metal yapıdır. Basamaklar bacak denilen profillerin birbirlerine bakan iç kısımlarına kanatılır.

Ek elemanı: Kablo kanallarını, kablo merdivenlerini, bağlantı parçalarını birbirlerine bağlayan birleştirme elemanıdır.

Yatay dönüş: kablo hattının yönünü yatay düzlemde değiştirmek için kullanılan açılı elemandır. 30, 45, 60, 90 derecelerde üretilir.

T dönüş: kablo taşıyıcı sisteminde aynı düzlem üzerinde 3 farklı yöne (açıya) dönüş elemanıdır. T elemanları “eşit” ve “farklı” olarak üretilmektedir.

Dörtlü bağlantı: kablo taşıma sisteminde aynı düzlem üzerinde 2 farklı yöne 4 çıkış veren elemandır.

Reduksiyon: kablo taşıma sisteminde aynı düzlem üzerindeki farklı genişliklerdeki iki kablo kanalı/merdiveninin birleştirilmesini sağlar. Ek tipi reduksiyonların farkı tabanı olmamasıdır.

Düşey bükey: farklı yüksekliklerde bulunan aynı genişlikteki kablo kanallarını / kablo merdivenlerini birbirine bağlar.

Sonlandrma: Kablo kanalı / kablo merdiveni hattını sonlandırır.

Kapak: seçilen kapak modeline göre kablo kanalının / kablo merdiveninin üstünü kapatır.

ОПРЕДЕЛЕНИЯ

Кабельные лотки система является структурой, которая несет в кабельной электрической системы и распределяет все кабели предназначены для машин и оборудования.

Кабельный лоток: представляет собой жесткую конструкцию для крепления, поддержки, проведения или распространение кабели.

Кабельные лестницы: состоит из двух продольных сторону рельсов связаны предварительно сварные на внутреннюю сторону рельсов.

Сборка частей: Разъем представляет собой кусок, который соединяет кабельных лотков и кабельных лестницы прямые участки и фитинги.

Секция угловая горизонтальная: это угловые соединения на горизонтальных кабельных трасс. Доступные в плоских углов поворотов на 30, 45, 60 и 90 градусов.

Т образное разветвление: является установка кабельного лотка кабельные лотки вступлении в 3 направлениях на 90 ˚ интервалом в той же плоскости. Тее поворотов предлагаются как "равные" и "неравными" ширины.

Секция крестообразная: для присоединения кабельных лотков в 4 направлениях 90 ˚ интервалом в той же плоскости.

Редукции: для присоединения кабельных лотков различной ширины в той же плоскости.

Внешний угловой элемент: для присоединения кабельных лотков той же ширины в различных вертикальных уровнях. Доступен как внутри, так и за пределами типов.

Единица конца: Используется в конце кабельные лотки и кабельные лестницы.

Обложка для кабельных лотков / **кабельного лестницы:** для закрытия верхней части лотка кабеля или кабеля лестницы прямые раздела или его компонентов, полностью или частично в зависимости от предпочитаемого типа покрытия крышки.

GERPAAS®

GENERAL INSTRUCTIONS

Cable trays, cable ladders nor any system components must be used as a walkway or support for people, this may cause personal injuries and also damage to the components, the cable support system and as well as the cables. All systems components must be controlled physically for any burrs, sharp edges and irregularities that may harm cables, other equipment or workers. Deformed system components must be repaired or must be changed with new components. Protective gloves and caps must be worn during shipping and carrying the system components. Safe working load capacities must be taken in consideration at all times. It is always recommended to set up an upgradeable support system for your requirements also in the future. External loads must be taken into account when designing a cable ladder vsystem (e.g. Wind loads, snow loads, ice loads etc.) Cable tray and cable ladder interiors where the cables and related will be installed must have smooth surface to allow for easier cable pulling and minimize the risks of damaging the cables. All cable tray and cable ladder straight pieces must be combined at the ends by splice plates.

1. Avoid stocking and shipping in humid or wet conditions. Dry environment is required for all metal components.
2. Keep all components away from the risk of physical impacts.preferably all items be kept in original packages, and it is strongly recommended to store on pallets and/or in cardboard boxes.
3. System components must not be used as walkway or support unit for people as since such behavior may reduce the performance of the components where as it also may cause personal injury and harm the entire electrical system.
4. In case that any damage is detected in the system components, immediate precautions must be taken by repairing the components or by changing with new ones.
5. Recommended temperature ranges must be taken in consideration at all times.
6. Installation of cable tray & cable ladder systems must be performed by qualified personnel.
7. SWL diagrams must be taken in consideration in electrical projects and installations.

GENEL BİLGİLER

Kablo taşıyıcılar üzerinde yürünmemeli, insan yükü uygulanmamalıdır. Uygulandığı taktirde taşıma sistemine ve elektrik sistemine zarar gelebilir. Kablo taşıma sisteminde çapak, sivri uç vb gibi unsurlar bulunmamalıdır; bulunduğu taktirde derhal onarılmalı veya düzgünü ile değiştirilmelidir. Yük taşıma kapasiteleri her zaman dikkate alınmalıdır. Kablonun döşeneceği yüzeyler kesinlikle düzgün olmalıdır.

1. Ürünler tercihen kuru ortamda korunmalı, nemli ve ıslak şartlardan uzak tutulmalıdır.
2. Ürünler fiziksel dış etkenlere maruz bırakılmamalı, tercihen orijinal paketlerinde paletler üzerinde tutulmalıdır.
3. Kablo taşıyıcıların üzerinde insan yükü uygulanması sistemin verimini düşüreceğinden ve tehlike arz edeceğinden sistem bileşenlerine insan yükü uygulanmamalıdır.
4. Sistem bileşenlerinde hasar tespit edildiğinde derhal onarılmalı veya değiştirilmelidir.
5. Sistem bileşenleri tavsiye edilen ısı şartlarında kullanılması ve depolanması gerekir.
6. Kablo taşıyıcıların bu konuda eğitimli personel tarafından monte edilmesi gereklidir.
7. Yük taşıma kapasitelerine uyulmalıdır.

ОБЩИЕ ПОЛОЖЕНИЯ

Кабельные лотки, лестничные лотки и другие компоненты системы не должны использоваться как дорожки или опорные стойки для людей- это может стать причиной повреждения деталей, опорной кабельной системы, кабелей и нанести личный ущерб. Все компоненты системы должны находиться под контролем физического лица от каких-либо колючих или острых углов,которые могут повредить кабель, другое оборудование или причинить вред рабочим. Деформированные компоненты системы следует исправить или заменить новыми деталями. Во время транспортировки компонентов системы пользоваться защитными перчатками и касками. Должна быть принята во внимание безопастность грузовой нагрузки. При необходимости обеспечить подъемные опорные системы. Внешняя нагрузка должна учитываться при проектировании системы лестничных лотков. Внутренние стороны кабельных и лестничных лотков, где будет монтироваться кабель, должны иметь гладкую поверхность, чтобы облегчить проведение и уменьшить риск повреждения кабеля. Все прямые детали кабельных и лестничных лотков должны крепиться при помощи связующих элементов.

1. Избегайте хранения и транспортировки в сырых или мокрых условиях. Сухая окружающая среда обязательна для всех металлических деталей.
2. Держите все компоненты от риска физического воздействия, предпочтительно каждый отдельный предмет хранить в подлинной упаковке или картонной коробке.
3. Компоненты системы не должны использоваться как дорожка или опорная стойка для человека, поскольку это может снизить производительность деталей повредить всю электрическую систему.
4. В случае обнаружения какого-либо повреждения в системе компонентов, следует немедленно принять меры предостсрожности по ремонту или замене деталей на новые.
5. Должен быть принят во внимание рекомендуемый температурный предел.
6. Монтаж систем кабельных и лестничных лотков должен выполняться квалифицированным персоналом.
7. Схемы грузовой нагрузки диаграммы должны учитываться в электрических проектах и монтажах.

GERPAAS®

	Recommended Conditions For Stocking And Shipping Of Cable Tray & Cable Ladder Systems
1	Avoid stocking and shipping in humid or wet conditions. Dry environment is required for all metal components.
2	Keep all components away from the risk of physical impacts and construction traffic. Preferably all items be kept in original packages, and it is strongly recommended to store on pallets and/or in cardboard boxes all elevated off the ground. GERPAAS® products are palletized and generally shrink-wrapped with secure PVC straps in export packaging.
3	System components must not be used as walkway or support unit for people as since such behavior may reduce the performance of the components where as it also may cause personal injury and harm the entire electrical system.
4	In case that any damage is detected in the system components, immediate precautions must be taken by repairing the components or by changing with new ones.
5	Recommended temperature ranges must be taken in consideration at all times. (-20 / +105° C)
6	Installation of cable tray & cable ladder systems must be performed by qualified personnel.
7	SWL diagrams must be taken in consideration in electrical projects and installations.

#	Kablo Kanalları Ve Kablo Merdivenlerini Taşıma ve Depolama İçin Genel Tavsiyeler
1	Ürünleri ıslak ve nemli yerlerde muhafaza etmeyiniz. Kuru ortam metal urunler için idealdir.
2	Tüm ürünleri fiziksel darbeye maruz kalabilecekleri ortamlardan uzak tutunuz. Tercihen orjinal paketlerinde depolayınız.
3	Ürünler üzerinde yürümek veya benzeri ağırlık uygulamak sakıncalıdır.
4	Ürünlerde defo tespit edildiği taktirde kullanmayınız, tamir ediniz veya yenisi ile değiştiriniz.
5	Ürünler tavsiye edilen sıcaklıklarda kullanılmalıdır. (-20 / +105° C)
6	Kablo taşıyıcıların montajı deneyimli ve bilgili yetkili personel tarafından yapılmalıdır.
7	Ürünlerin yük taşıma kapasitelerine uyunuz.

#	Рекомендуемые условия для хранения и перевозок кабельных лотков И Системы кабельных лестниц
1	Не запасов продукции на влажных.
2	Храните в безопасных районах, с минимальным риском физического воздействия. Храните продукты в оригинальной упаковке.
3	Продукция не должна быть использована в качестве ходить путями.
4	Если какие-либо физические недостатки обнаружены, то свяжитесь с изготовителем / поставщиком модернизировать или изменить в продукте. Не используйте поврежденные или используемых продуктов.
5	Рекомендуемая температура должна приниматься во внимание во все времена. (-20 / +105° C)
6	Монтаж кабельных лотков И лестничных кабельных систем должны выполняться квалифицированным персоналом.
7	Грузоподъемность диаграммы должны быть приняты во внимание во все времена.

GERPAAS®

SAFETY

1- Cable trays, cable ladders or any of the system components must not be used as a walkway, or support for people; this may cause personal injuries, and also damage the components, the cable support system, and as well as the cables.
2- All system components must be controlled physically for any burrs, sharp edges and irregularities that may harm cables, other equipment or workers.
3- Deformed system components must be repaired or must be changed with new components.
4- Protective gloves and caps must be worn during shipping and carrying the system components.
5- Safe working load capacities must be taken in consideration at all times.
6- External loads must be taken into account when designing a cable tray or cable ladder system (e.g. wind loads, snow loads, ice loads etc.)
7- Cable tray and cable ladder interiors where the cables and related equipment will be installed must have smooth surface to allow for easier cable pulling and minimize the risks of damaging the cables. All cable tray and cable ladder straight pieces must be combined at the ends by splice plates.
8- The performance of a cable tray wiring system is dependent to its proper installation, including supports and cables. Neglecting installation and maintenance guidelines may lead to personal injury as well as damage to property.
9- Nonmetallic supports and hardware may require special load bearing considerations due to material composition and application temperature or other factors.

EMNİYET

1- Kablo kanalları, kablo merdivenleri veya diğer sistem bileşenleri insanlar için yürüme yolu veya destek eşyası olarak kullanılmamalıdır; bu, sistemdeki ekipmanlara, ve kablolara ve çevredekilere zarar verebilir.
2- Tüm sistem bileşenleri çapak, sivri uç veya benzeri hatalara karşı kablolama yapılmadan önce kontrol edilmelidir.
3- Bozuk malzeme kullanılmamalı ve derhal tamir edilmeli veya yenisi ile değiştirilmelidir.
4- Taşıme sırasında koruyucu eldiven ve başlık kullanılmalıdır.
5- Yük taşıma kapasiteleri dikkate alınmalıdır.
6- Dış etkenlere bağlı yükler dikkate alınmalıdır (rüzgar yükü, kar yükü, buz yükü vb.)
7- Kablo taşıyıcıların iç kısımlarında kablolara zarar verebilecek yüzeyler bulunmamalıdır. Kablo taşıyıcılar birbirlerine ek parçaları ile eklenmelidir.
8- Kablo taşıma sisteminin performansı doğru montaj yapılmasına bağlıdır. Dikkatsiz yapılan montajlama sonucu insanlara ve ekipmanlara zarar gelebilir.
9- Metal olmayan bileşenler ve bağlantı elemanlarındada yük taşıma kapasitelerine dikkat edilmeli ve malzeme farklılığından dolayı kaynaklanabilecek termal gerilme ve genleşme oranlarına bakılmalıdır.

Безопасность

1- Кабельные лотки, кабельные лестницы или любого из компонентов системы не должны быть использованы в качестве дорожки или поддержки для людей, это может причинить телесные повреждения, а также повредить компоненты, системы поддержки кабелей, а также а также кабелей.
2- Все компоненты системы должны контролироваться для любого физического заусенцев, острых кромок и нарушения, которые могут повредить кабель, другого оборудования или других работников.
3- Деформированные компоненты системы должны быть отремонтированы или должно быть изменено с новыми компонентами.
4- Защитные перчатки и шапки необходимо носить во время транспортировки и реализации компонентов системы.
5- Безопасная рабочая нагрузка потенциала должны быть приняты во внимание во все времена.
6- Внешние нагрузки должны быть приняты во внимание при проектировании кабельных лотков или кабельного лестнице (например, ветровые нагрузки, нагрузки снега, льда нагрузок т.д.)
7- Кабельные лотки и кабельные лестницы интерьеры, где кабелей и связанных с ними будет установлено оборудование, должны иметь гладкую поверхность, облегчают закрепления кабелей и минимизации рисков повреждения кабелей. Все кабельных лотков и кабельных лестницы прямые частей должны быть объединены на концах путем сращивания пластин.
8- Выполнение кабельных лотков система проводки зависит его правильной установки, в том числе поддерживает и кабели. Пренебрегая установка и обслуживание руководящих принципов может привести к телесным повреждениям, а также ущерб имуществу.
9- Неметаллические поддерживает и оборудования могут потребоваться специальные несущие соображения, обусловленные составом и материальной температура применения или других факторов.

GERPAAS®

Selection Of The Correct Cable Tray Sizes
Выбор правильного кабельных лотков
Doğru Kablo Kanalı Seçimi

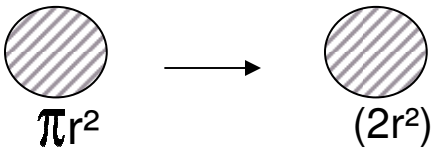

1. Use ($2r^2$) formula to find the area of each cable.
   Используйте ($2R^2$), чтобы найти кабеля области.
   Kablonun alanını $2R^2$ ile bulun.

2. Find the total area of cables required for your cable tray route.
   Определите ваши области требование для кабелей
   İhtiyacınız olan kablo kesiti alanını belirleyin.

3. It is recommended to keep a +%20 reserve margin for future revisions in cable route.
   Мы рекомендуем, чтобы сохранить 20% запас пространства для ваших будущих потребностей.
   Kablolama alanında %20 rezervli bırakmanız tavsiye edilir.

4. Choose the corresponding size of cable tray using the table below.
   Выберите соответствующий размер кабельных лотков помощью показано ниже таблице.
   Aşağıdaki tablodan uygun kablo kanalı tipini seçiniz.

5. It is highly recommended to choose the nearest higher value.
   Настоятельно рекомендуется выбирать ближайшее большее значение.
   En yakın büyük değerin seçilmesi tavsiye edilir.

Cross Sectional Area (mm^2)										
		A			A					
W	mm	15	25	40	25	40	50	60	75	100
	50	750	1250	2000	1000	1600	2000	2400	3000	4000
	70	1050	1750	2800	1400	2240	2800	3360	4200	5600
	100	1500	2500	4000	2000	3200	4000	4800	6000	8000
	125	1800	3000	4800	2400	3840	5000	5760	7500	10000
	150	2250	3750	6000	3000	4800	6000	7200	9000	12000
	200	3000	5000	8000	4000	6400	8000	9600	12000	16000
	225	3375	5625	9000	4500	7200	9000	10800	13500	18000
	250	3750	6250	10000	5000	8000	10000	12000	15000	20000
	300	4500	7500	12000	6000	9600	12000	14400	18000	24000
	400	6000	10000	16000	8000	12800	16000	19200	24000	32000
	450	6750	11250	18000	9000	14400	18000	21600	27000	36000
	500	7500	12500	20000	10000	16000	20000	24000	30000	40000
	600	9000	15000	24000	12000	19200	24000	28800	36000	48000
	750	11250	18750	30000	15000	24000	30000	36000	45000	60000
	900	13500	22500	36000	18000	28800	36000	43200	54000	72000

GERPAAS®

GERPAAS® standard sizes and equivalents in NEMA standards:
We use metric sizes in all calculations. However, for the enquiries listed with units including inches the nearest metric standard dimensions are taken into consideration as shown in the table below;

inches (imperial)	Conversion to mm (metric)	Adaptation to Gerpaas standards
3”	76.2	75 mm
4”	101.6	100 mm
5”	127.0	125 mm
6”	152.4	150 mm
8”	203.2	200 mm
9”	228.6	225 mm
10”	254.0	250 mm
12”	304.8	300 mm
16”	406.4	400 mm
18”	457.2	450 mm
20”	508.0	500 mm
24”	609.6	600 mm
30”	762.0	750 mm
35”	889.0	900 mm

Anti-Corrosion
The corrosive environment of the site environment must be studied prior to determination of the material and finish options of the cable tray systems. Proper selection of the corrosion protection method lengthens the life of the steel material and provides safe and economical use.

CLASSIFICATION OF ENVIRONMENTS			
Corrosion category	**Loss of thickness µm/year**	**Typical environment**	
		Indoor	**Outdoor**
C1 inconsiderable	≥0,1	-	Heated buildings (offices, schools, stores etc.)
C2 Slight	>0,1 until 0,7	Little pollution Like rural areas	Not heated buildings with formation of condensate like store houses, coliseums
C3 Moderate	>0,7 until 2,1	City and industrial environments with moderate pollution	Highly humid production plants like laundry, brewery and diary
C4 Strong	>2,1 until 4,2	Industrial areas and coastlines with moderate salt impact	Chemical plants, swimming pools
C5-I Very strong (industrial)	>4,2 until 8,2	Industrial environment with high humidity and aggressive atmosphere	Buildings or areas with almost permanent condensation and pollution
C5-M Very strong (marine)	>4,2 until 8,2	Coastlines and offshore areas with high salt impact	Buildings or areas with almost permanent condensation and pollution

GERPAAS®

Hot dip galvanize (HDG) (EN 1461 – TSE 914)
GERPAAS® offers most of the products with hot dip galvanized finishes which bring ideal anti-corrosive performance in many circumstances. In this coating method a metallic bond occurs resulting in a zinc coating that completely coats all surfaces, including edges and welds. Best advantage of this coating method is its coating thickness which exceeds 45 microns in almost all thicknesses. Hot dip galvanizing is made after manufacture of the steel products by means of dipping the items in molten zinc bath.
The layer of zinc which bonds to steel provides a dual protection against corrosion. It protects first as an overall barrier coating. If this coating happens to be scratched or gouged, zinc's secondary defense is called upon To protect the steel by galvanic action. Hot dip galvanized finish is recommended for prolonged outdoor exposure, and it protects steel for many years in outdoor environments. Zinc coatings above 85 microns available upon request.

INTERNATIONAL STANDARDS					
	Europe	Germany	Great Britain	France	U.S.A
HDG	ISO EN 1461	DIN ISO EN 1461	BS EN ISO 1461	EN ISO 1461	ASTM A123/A 123M
PG	ISO EN 10142	DIN EN 10142	BS 2989	EN ISO 10142	ASTM A653SS
EG	EN 12329	DIN 50961	EN 12329	EN 12329	ASTM B633

REQUIREMENTS OF HOT DIP GALVANIZATION AS PER EN ISO 1461		
ARTICLE AND ITS THICKNESS	LOCAL COATING THICKNESS (min)[a] µm	MEAN COATING THICKNESS (min) b
STEEL > 6 mm	70 (505)	85 (610)
STEEL > 3 mm - < 6 mm	55 (395)	70 (505)
STEEL > 1.5 mm - < 3 mm	45 (325)	55 (395)
STEEL < 1.5 mm	35 (250)	45 (325)
CASTINGS > 6 mm	70 (505)	80 (575)
CASTINGS < 6 mm	60 (430)	70 (505)

Hot dip pregalvanize (PG) (EN 10142 – 10327, TSE 822)
Gerpaas also offers hot dip pregalvanized finish for many products. This is also known as mill galvanized or hot dip mill galvanized or continuous hot dip galvanized. Importance of the pregalvanized finish is that pregalvanized steel can repair itself on the cut edges by means of natural spreading of the zinc surrounding the cut edges. During fabrication, cut edges and welded areas are not normally zinc coated; however, the zinc near the uncoated metal becomes a sacrificial anode to protect the bare areas after a short period of time. Pregalvanized steel is easy for welding works and ideal for painting. Temperature differences should not exceed 10 C˚ during storage.

COMPARISON OF HDG TO PG IN CORROSIVE ENVIRONMENTS

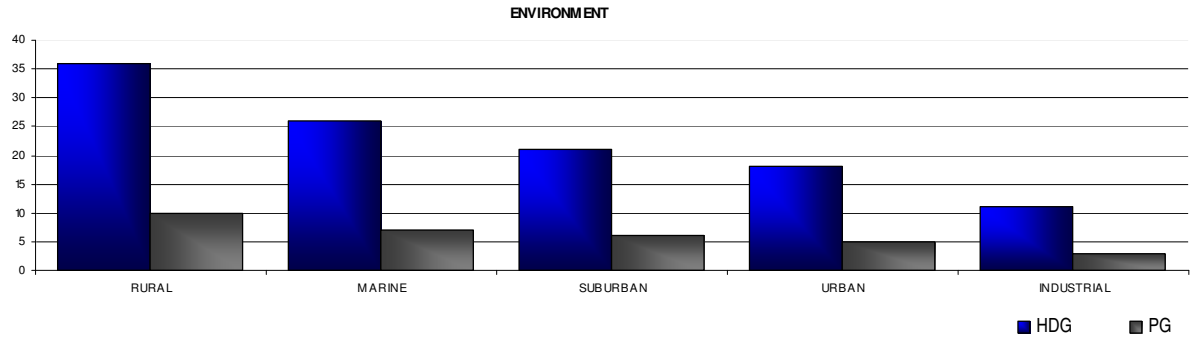

ZINC COATING IN PREGALVANIZED STEEL AS PER TS 822 (min)													
Steel gauge (mm)	0,35 and less	0,40	0,45	0,50	0,55	0,65	0,75	0,85	0,95	1,05	1,25	1,55	2,05
Zinc coatings as per 3 point method (gr/m)	122	153		183		214						275	
Coating class	1D	1C		1B		1A						2D	

Electrogalvanize (EG) (DIN 50961, TSE 149)
GERPAAS supplies bolts, nuts, washers, thread rods, and such fixing & fasteners in electrogalvanized finish in standard unless otherwise stated. also known as zinc plated or electroplated) is the process by which a coating of zinc is deposited on the steel by electrolysis from a bath of zinc salts. This type of zinc coating is recommended for indoor use in relatively dry areas as it can provide 96 hours protection in salt spraying tests.

Aluminum (grades 6063 and others)
Aluminum cable tray systems bring the advantage of light weight in the cable support systems.

- Aluminum cable trays are about 50% lighter than steel made items,
- are non-magnetic and this structural property avoids electrical disturbance in currents,
- Are highly resistant to corrosion

GERPAAS®

Stainless Steel

Gerpaas offers 304 and 316 (L) grade stainless steel material for most of the product ranges carried. Stainless steel material provides very effective corrosion protection in acidic and humid areas and therefore it is a longlasting solution in corrosion protection. Especially, AISI 316 grade stainless steel provides ultimate anti-corrosion performance in marine and industrial environments where high levels of humidity and acidic air are prevalent: i.e.onshore and offshore applications. AISI 316 (1.4404) is a molybdenum-bearing austenitic stainless steel with high corrosion resistant properties which also has excellent welding and forming characteristics. (Used in onshore & offshore applications, oil & gas plants, petrochemical industries etc.)
AISI 304 (1.4301) also has high corrosion protection properties and is used extensively in production plants, facades and in similar corrosive exterior environments.
The chromium layer on the stainless steel surface is the area that gives the corrosion resestents characteristic to the material. Unless an extra quating (finishing) it is requested, steinless steel products do not requar any addishenal coating for corrosion production. The stainless steel used in Gerpaas products, which are of the austenitic class, has excellent corrosion and oxdidation resistance due to the high chromium content. Austenitic steinless steels incorparate nickel which strengthens the oxide layer and inceases protection in aggressive environments. As a general characteristic AISI 304 and 316 grade stainless steel material is strongly durable in high and low temperatures.

Mechanical Properties of Stainless Steel

Material Grade	Property		
	Proof Strength	Tensile strength Rm N/mm²	Elongation A 80 %
1.4404	240 Min	530 to 680	40
1.4301	240 Min	530 to 680	40

Proof strength: 0.2% Rp0.2 N/mm ²

Mechanical Properties – Austenitic Grades
Bolts, Screws and Studs

Grade	Property Class	Tensile Strength Rm MPa (N/mm²) minimum	Yield Stress R, 0.2 Mpa (N/mm²) minimum	Elongation A Minimum	Proof Load Stress Sp Mpa (N/mm²) minimum	Diameter Range
A2 And A4	70	700	450	0.4d	700	=<M20
	80	800	600	0.3d	800	=<M20

Comparison of US and ISO Stainless Steels

A2 and A4 as compared to 304 and 316	Percent difference from US – Stainless Steel
Up to M20	44% higher
M22 and over	6% lower

Selection of Diameters
Tightening Torques, Loads
Guideline values for screws in steel groups A2-70 and A4-70 with standard metric threads to DIN 13

Diameter	Load' Force at 0.2 % yield point N	Initial stressing force N	Tightening torque Nm	Force in service N		
				Axial static	Axial dynamic	Radial static or dynamic
M3	2250	1420	0.9	610	360	120
M4	3960	2490	2.2	1070	640	210
M5	6390	4030	4.3	1730	1040	350
M6	9040	5700	7.3	2440	1470	490
M8	16470	10380	17.7	4450	2670	890
M10	26100	16440	35.5	7050	4230	1410
M12	37930	23900	61.3	10240	6150	2050
M16	70650	44510	147.1	19080	11450	3820
M20	110250	69460	285.1	29770	17860	5950

GERPAAS®

ENVIRONMENTAL

Thermal
Gerpaas cable trays are designed to accommodate any thermal expansion and contraction within certain temperature ranges.

Light
GERPAAS cable trays can not be affected by artificial or natural light.

RoHS
The cable tray and ladder system components do not include any of the materials identified in the RoHS regulations.

Green Issues
All boxes and packs are manufactured of recyclable or biodegradable material, where practicable.

ELECTRICAL CONTINUITY

GERPAAS earth links create connections with the required electrical continuity as per IEC 61537 on cable trays and cable ladders. Earth links (earth bonding straps) are fixed on cable tray and cable ladders At coupling regions. Each end of earth link requires 1 M8 / M10 bolt & nut.

Cable Tray Width / CSA Table	
Width of Tray (W)	**CSA**
50 – 300mm	16mm2
300 – 900mm	25mm2

CLASSIFICATION TO EN 61537

#	General Properties of GERPAAS Cable Tray & Cable Ladder Systems to IEC 61537
1.	Metallic material
2	Fire resistant (non-flame propagating system component)
3.	Electrical continuity
4	Electrical conductivity
5.	Metallic coated
6.	Ideal temperature range in stocking, shipping, and installation is -20˚C / +105˚C
7.	Free base area of GE-KT cable trays is C class.
8.	Free base area of GE-MC cable ladders is Y class

GERPAAS®

Material	Modulus of Elasticity (10^6 Pa)	Shear Modulus (10^6 Pa)	Bulk Modulus (10^6 Pa)	Poisson's Ratio (10^6 Pa)
Copper	107558,2	39989,6	123416,2	0,355
Stainless Steel	190295,3	73084,4	162716,3	0,305
Steel, Cast	196500,6	77910,8	139274,1	0,265
Steel, C.R.	203395,3	79289,7	159268,9	0,287

Material	*coefficient of linear thermal expansion α*	*coefficient of volumetric thermal expansion β*
	α in 10-6/C at 20 °C	**β(=3α) in 10-6/C at 20 °C**
Stainless steel	17.3	51.9
Steel	11.0 ~ 13.0	33.0~ 39.0
Aluminium	23	69
Copper	17	51

TECHNICAL INFORMATION ON ELECTROSTATIC POWDER COATING SPECIFICATIONS
ELEKTRO STATIK TOZ FIRIN BOYA TEKNİK ÖZELLİKLERİ
СТАТИЧЕСКИХ ПОРОШКОВАЯ КРАСКА ХАРАКТЕРИСТИКИ

POLYESTER PAINT (PEF) Application for outdoor use		TEST TYPE	EPOXY POLYESTER PAINT (EP/PE) Aplication for indoor use	
PEF	STANDARD		STANDARD	EP/PE
60	-	FILM THICKNESS (micron)	-	60
70-180	ASTM 2796 5/8 steel ball	IMPACT RESISTANCE (kg-cm)	ASTM 2796 5/8 steel ball	70-180
5-10	DIN 53106 ISO1520	ERICHSEN TEST (mm)	DIN 53106 ISO1520	5-10
3-12	DIN 53125 ISO 1520	BENDING TEST (mm)	DIN 53125 ISO 1520	3-12
80-100	DIN 53153 ISO 2815	BUCHOLZ HARDNESS (kg-cm)	DIN 53153 ISO 2815	80-100
HB-2H	ASTM D 3363	PENCIL HARDNESS	ASTM D 3363	HB-2H
1000 hours Perfect	SALT FOG TEST ASTM B 117-73	CORROSION RESISTANCE-1 (Zinc phospate coated steel)	SALT FOG TEST ASTM B 117-73	1000 hours perfect
1200 hours	SALT FOG TEST	CORROSION RESISTANCE-2 5 micron zinc coating Top layer special chromated steel	ASTM 2796 5/8 steel ball	70-180
GTO No Adhesion loss	DIN 5315/2mm ISO 2409/2mm	ADHESION TEST	DIN 5315/2mm ISO 2409/2mm	GTO No Adhesion loss
PERFECT RESISTANCE TO ATMOSPHERIC CONDITIONS		RESISTANCE TO OUTDOOR CONDITIONS	PERFECT RESISTANCE TO OUTDOOR CONDITIONS	
-		RESIST. TO CHEM. ENVIRONMENT	GOOD	
PERFECT		U.V.RESISTANCE (Color and brightness)	GOOD	
PERFECT		HEAT RESISTANCE	GOOD	

GERPAAS®

IMPORTANCE OF COUPLERS IN LOAD CAPACITY OF CABLE TRAYS

The choice of couplers is an important fact like that of their positioning in the span and a correctly placed coupler increases the load bearing performance of the cable trays and cable ladders. GERPAAS® couplers are designed and tested for high mechanical resistance as well as electrical performance.
For most of the spans, we recommend a coupling distance of 1/4L in all applications. Please note that all load capacity information provided within this catalogue are for uniformly distributed loads unless otherwise stated specifically.
The standard imposes a deflection of 1/100 of the span.

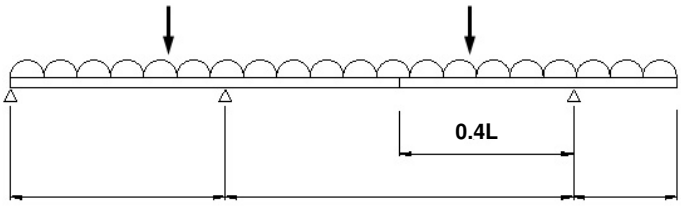

INSTALLATION OF FIXING SETS

The entire GERPAAS® cable tray and cable ladder system is standardized to M8 fixings which enables The use of one standard size. All fixing sets (incl. 1 bolt, and 1 nut) are supplied in electro zinc plated finish (EG). Additionally, stainless steel made fixing sets are available upon request. It is strongly recommended to keep the rounded head of the bolts inside the cable tray to provide smooth edges inside the cable route.

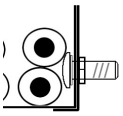

RECOMMENDED LOADS FOR STRUT CHANNELS

Span (mm)	41x21x2.0	41x21x2.5	41x21x2.5	41x41x2.0	41x41x2.5	41x41x2.5	41x21x2.0	41x21x2.5	41x41x2.0	41x41x2.5
	Perforated	Perforated	non-perforated	Perforated	Perforated	Non-perforated	Back-to-back	Back-to-back	Back-to-back	Back-to-back
500	210	250	270	640	780	825	610	750	1820	2300
750	105	120	145	430	520	555	415	500	1250	1500
1000	55	65	80	320	390	410	310	375	950	1100
1250	35	40	50	215	265	305	205	245	760	980
1500	25	30	35	150	180	210	140	170	635	750
1750	15	20	25	110	135	155	105	125	540	650
2000	15	15	20	80	100	120	80	95	475	570
2250	10	12	15	65	80	95	60	75	385	475
2500	10	10	10	55	65	75	50	60	315	385
2750	8	9	10	45	55	60	40	50	260	320
3000	7	8	8	35	45	50	35	40	215	265

GERPAAS®

SUPPORTS

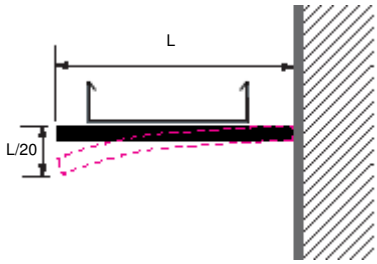

- The safe working load is limited by a maximum deflection of L/20 at the end of the bracket.
- A safety factor of 1.7must be included.

The recommended support distance is 1500 millimeters since optimum strength is achieved in spans of 1500mm. Supports for cable ladder should be spaced with the recommended span in order to suit the load capacity of the cable tray system most economically. The general rule is that the load carrying capacity of a system increases as the span decreases.

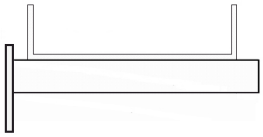

Position the cable tray or cable ladder close to the bracket head plate.

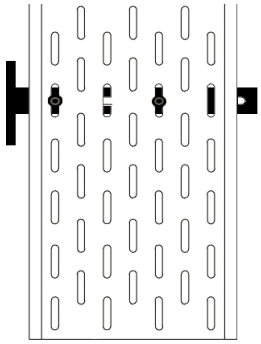

- Fix the cable tray onto the bracket through the matching slots.
- Avoid loose fixings.
- Make sure the cable tray is strongly fixed to the bracket.
- A minimum of 2 pairs of M8 bolts and nut must be used for each bracket.

Application of GE-IK brackets

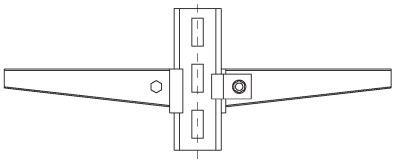

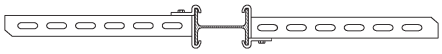

GERPAAS®

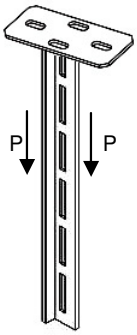

Application of T type ceiling brackets and SWL

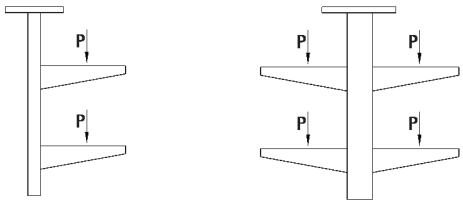

L (mm)	Load (N)
100	4315
200	3432
400	2354
600	5884

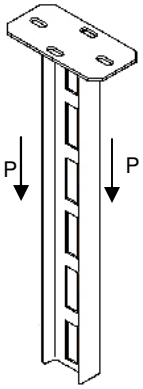

Application of I type ceiling brackets and SWL

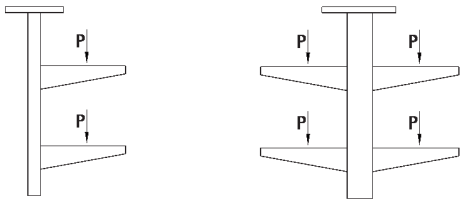

L (mm)	Load (N)
100	5900
200	5500
400	5000
600	4500

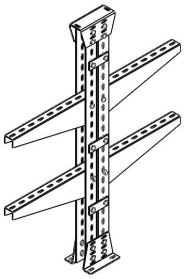

Application of hanger brackets and SWL

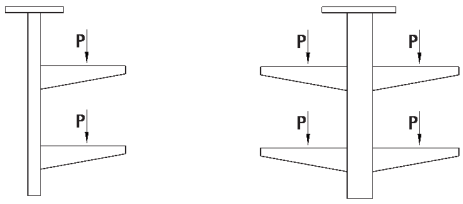

L (mm)	Load (N)
100	3500
200	2600
400	1500
600	700

Application of GE-KD wall brackets and SWL

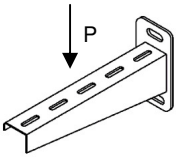

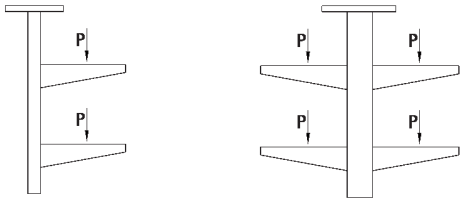

L (mm)	Load (N)
100	1800
200	1100
400	1300
600	550

Application of GE-KDA wall brackets and SWL

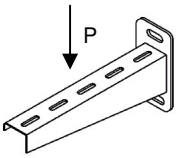

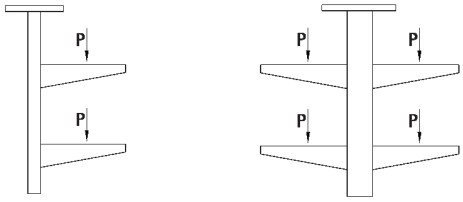

L (mm)	Load (N)
100	2300
200	1800
400	1500
600	900

GERPAAS®

CABLE LADDER
RUNG TYPE-1:

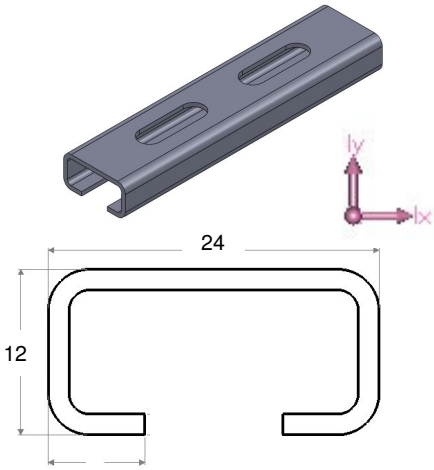

Area of Section	78,21	mm²
I_X	1496,44	mm⁴
I_Y	5958,81	mm⁴

W	Density	Mass	Volume	Surface Area
mm	gr/mm³	gr	mm³	mm²
100	0,0078	56,64	7261,78	10316,18
150		86,42	10822,82	15325,11
200		112,19	14383,86	20334,03
250		139,97	17944,90	25342,96
300		167,75	21505,94	30351,89
400		223,30	28628,02	28628,02
450		251,07	32189,06	40369,74
500		278,85	35750,10	50387,60
600		334,40	42872,17	60405,45
750		417,73	53555,29	75432,23
900		501,06	64238,41	90459,01

CABLE LADDER
RUNG TYPE-2:

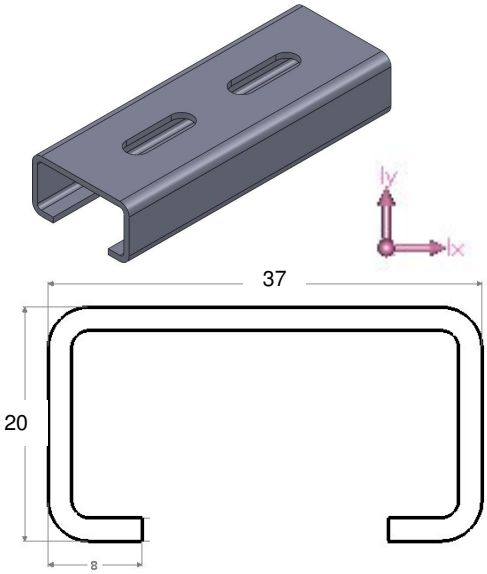

Area of Section	161,42	mm²
I_X	8317,01	mm⁴
I_Y	32161,30	mm⁴

W	Density	Mass	Volume	Surface Area
mm	gr/mm³	gr	mm³	mm²
100	0,0078	120,09	15396,53	16355,89
150		179,41	23001,66	24308,86
200		238,73	30606,80	32261,82
250		298,05	38211,93	40214,79
300		357,37	45817,06	41867,75
400		476,01	61027,33	64073,68
450		535,33	68632,46	72026,65
500		594,65	76237,59	79979,61
600		713,29	91447,86	95885,54
750		891,25	114263,30	119744,40
900		1069,21	137078,65	143603,33